Assembly Instructions:

Product Code : ARCO BL
Product Name: ARCO Chair

Time Required:

20 minutes

Tools Required:

Screwdriver, Electric Drill, Pencil, Measuring tape/Ruler
*Tools are not included.

Skill Required:

Easy ●●●○○ Hard

The Assembly Skill Rating is a 5-point system that shows the degree of effort needed in assembling a specific product.
With 1 being easy for the average person and 5 requiring an expert. For most products, two persons are recommended.

• As thi ls may be required.
• No ble or desk tops.
sembling.
• If you are missing any hard e ensure you have the name of the item,

EFI Furniture
32 Lisa Place, Coolaroo VIC 3048
03 9302 3067
efifurniture.com.au
contactus@efifurniture.com

• Please retain your receipt as proof of purchase to validate your warranty.
• Assemble on a clean, flat, smooth surface such as a rug or carpet to avoid parts from being scratched.
• Remove all wrapping materials, including staples and packing straps before you start to assemble
• Keep all hardware parts out of reach of children.

CAUTION

• Heavy product. Do not attempt to lift or move without help
• Do not tighten screws and bolts until completely assembled.
• Do not use this product unless all bolts and screws are firmly secured and tightened.

WARNING

• If parts are missing, broken, damaged or worn stop using the product until all repairs are made.
• Failure to follow these warnings could result in serious injury.

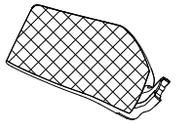

A 1PCS

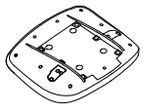

B 1PCS

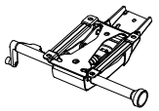

C 1PCS

D 1SET

E 1PCS

F 1PCS

G 5PCS

H 1PCS

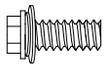

I 3PCS

J 6PCS

K 4PCS

Optional Accessories

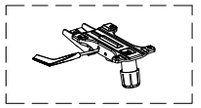

L 1PCS

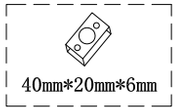

M 2PCS

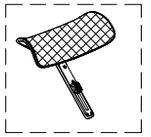

*Optional Add-On

N 1PCS

*Optional Add-On

O 1PCS

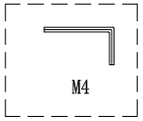

*Optional Add-On

P 1PCS

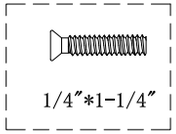

*Optional Add-On

Q 2PCS

ARCO CHAIR ASSEMBLY INSTRUCTIONS

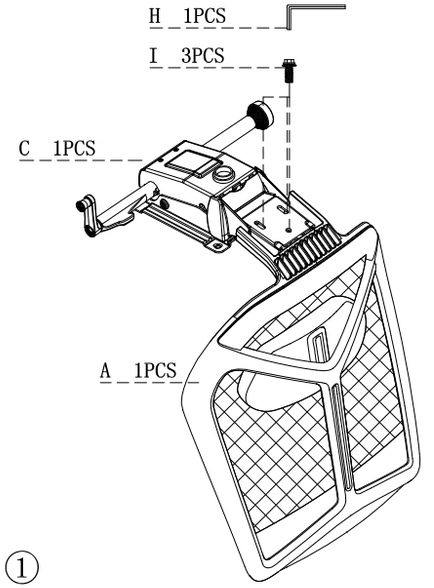

①

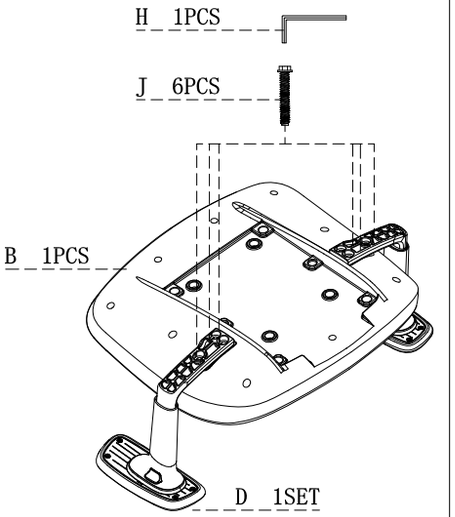

②

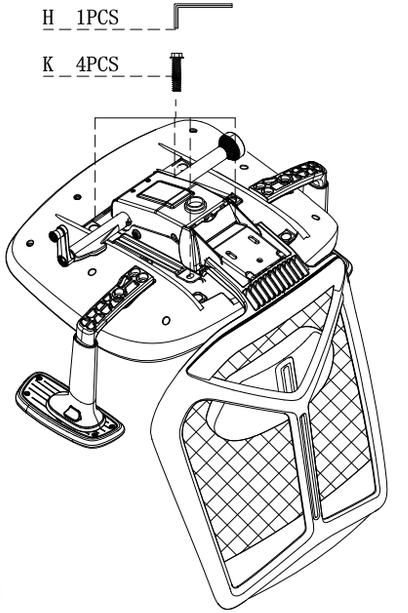

③

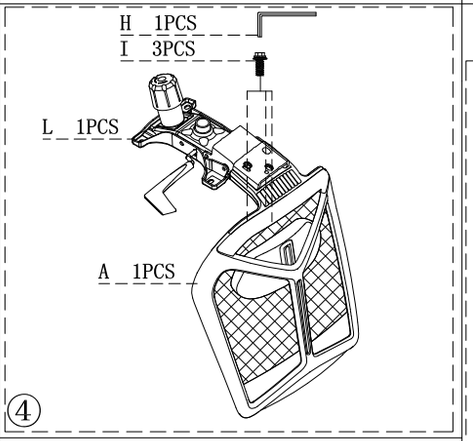

④

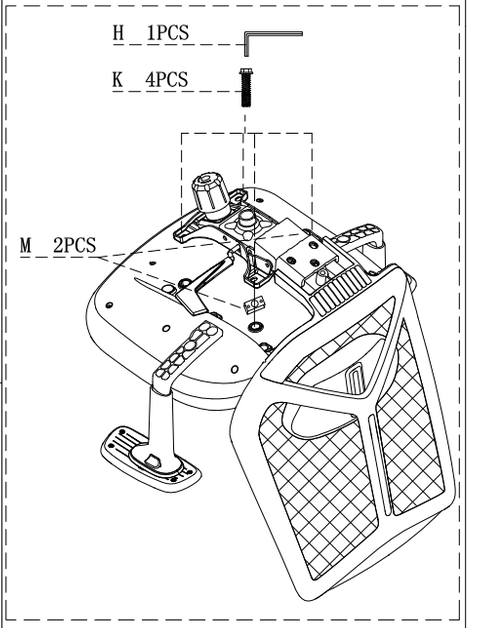

⑤

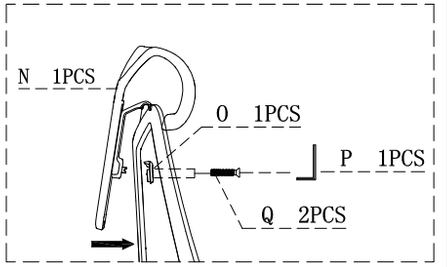

⑥ *Optional Add-On

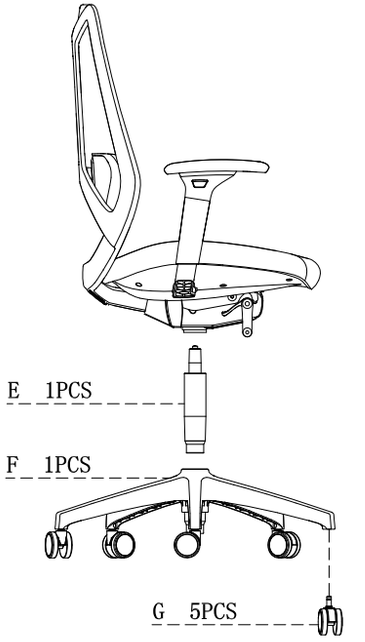

⑦

rapidline FURNITURE FOR TODAY

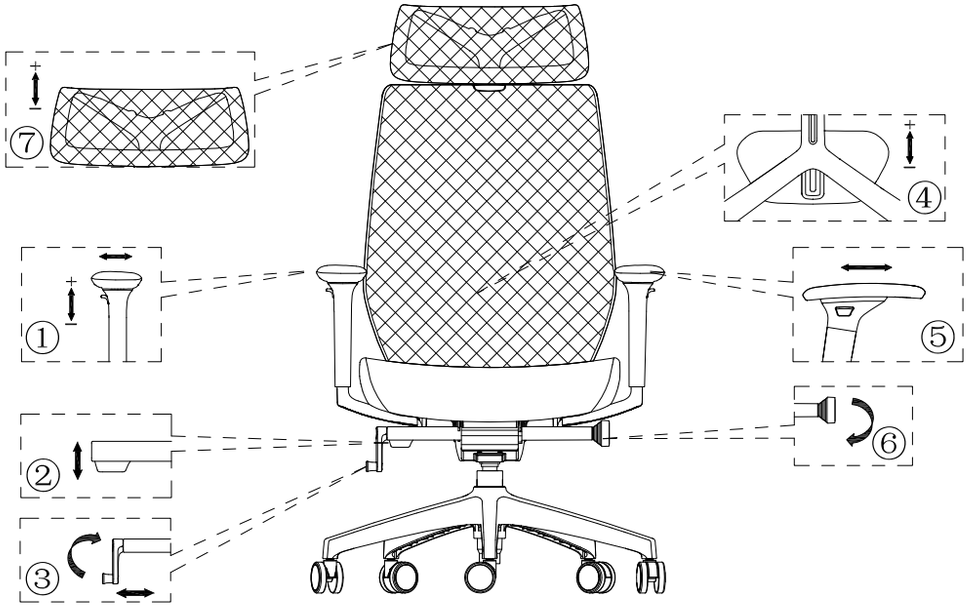

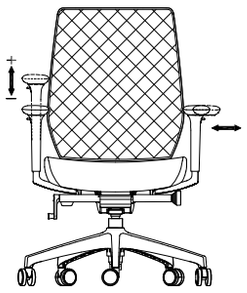
①

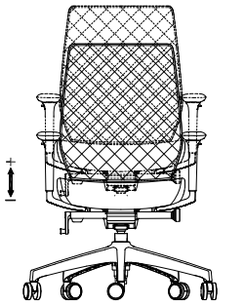
②

③

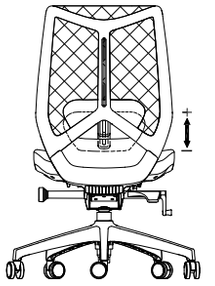
④

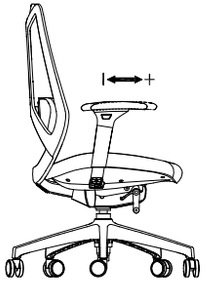
⑤

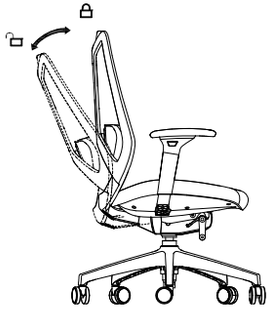
⑥

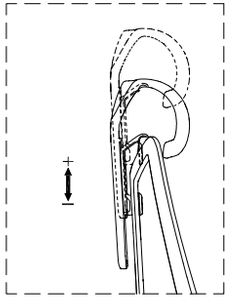
⑦

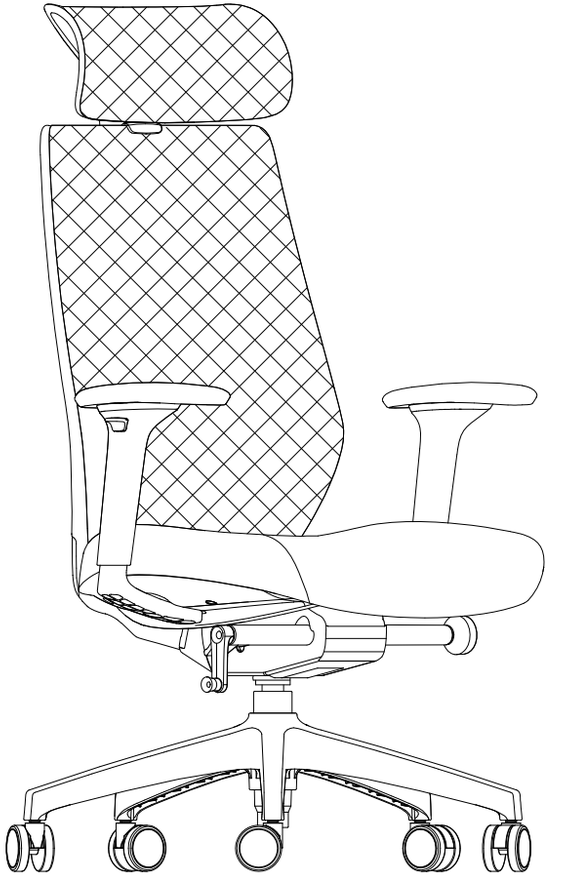

ARCO Chair operation manual

rapidline
FURNITURE FOR TODAY