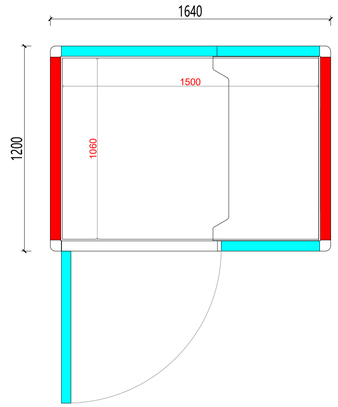

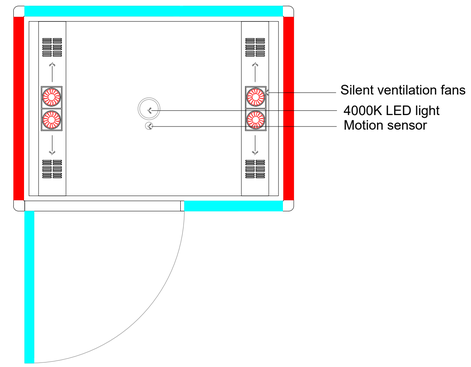

W pod
Exterior size: 1640*1200*2310mm
Interior size: 1500*1060*2160mm

Exterior finishes:\
Interior finishes: \
Carpet: \
Table: \

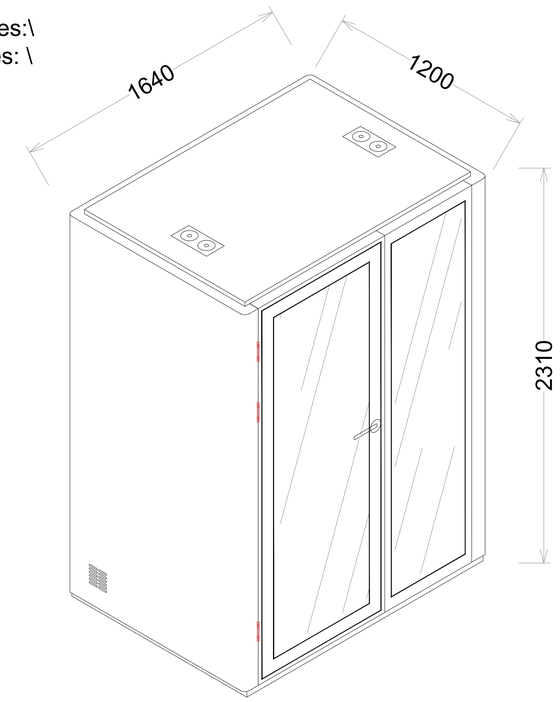

W pod 3D perspective drawing

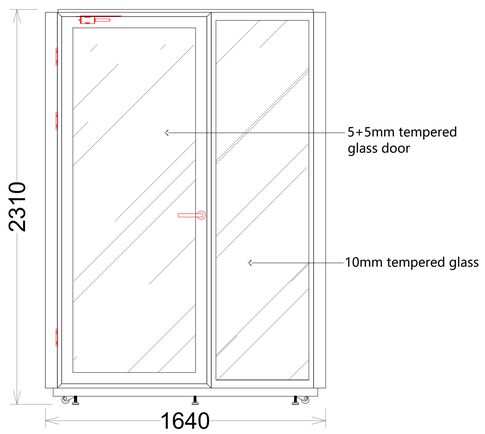

01 ELEVATION-Front wall

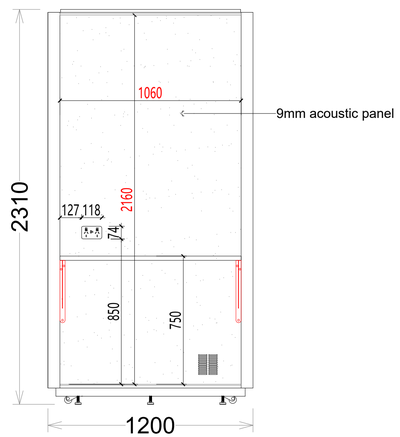

02 ELEVATION-Right wall

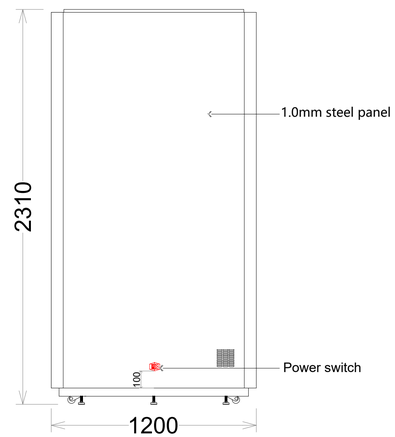

02 ELEVATION-Right wall

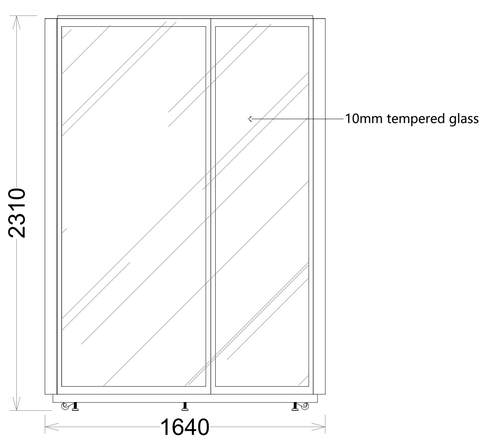

03 ELEVATION-Back wall

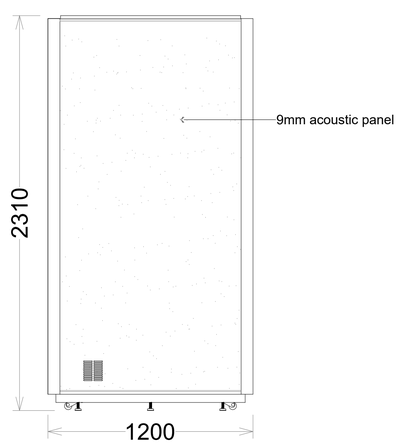

04 ELEVATION-Left wall

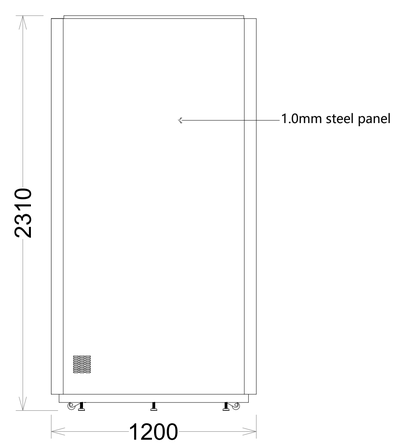

04 ELEVATION-Left wall

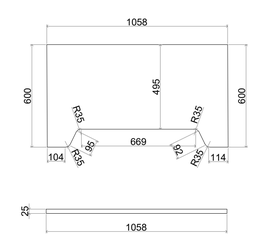

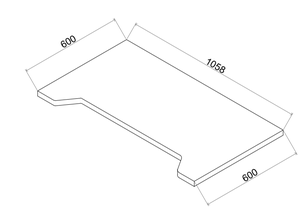

Table size drawing

公司LOGO

DRAWING TITLE

VERSION

部署地址

PROJECT

ALL DESIGNS IN THIS DRAWING ARE THE PROPERTY OF XXXXXXXXXX CO., LTD. AND CANNOT BE USED WITHOUT THE WRITTEN PERMISSION

DO NOT SCALE DRAWINGS.

ALL MEASUREMENT MUST BE CHECKED AND VARIFIED ON SITE.

APPROVED BY

PROJECT DIRECTOR

DESIGNED BY

DRAWN BY

SCALE 1:100

DATE 2025.07

DRAWING NO

JOB NO

EFIFURNITURE