EFIFURNITURE

Boost Crank Back to back desk frame

Instruction Manual

Table of Contents

Component parts 2

Assembly Instructions 3

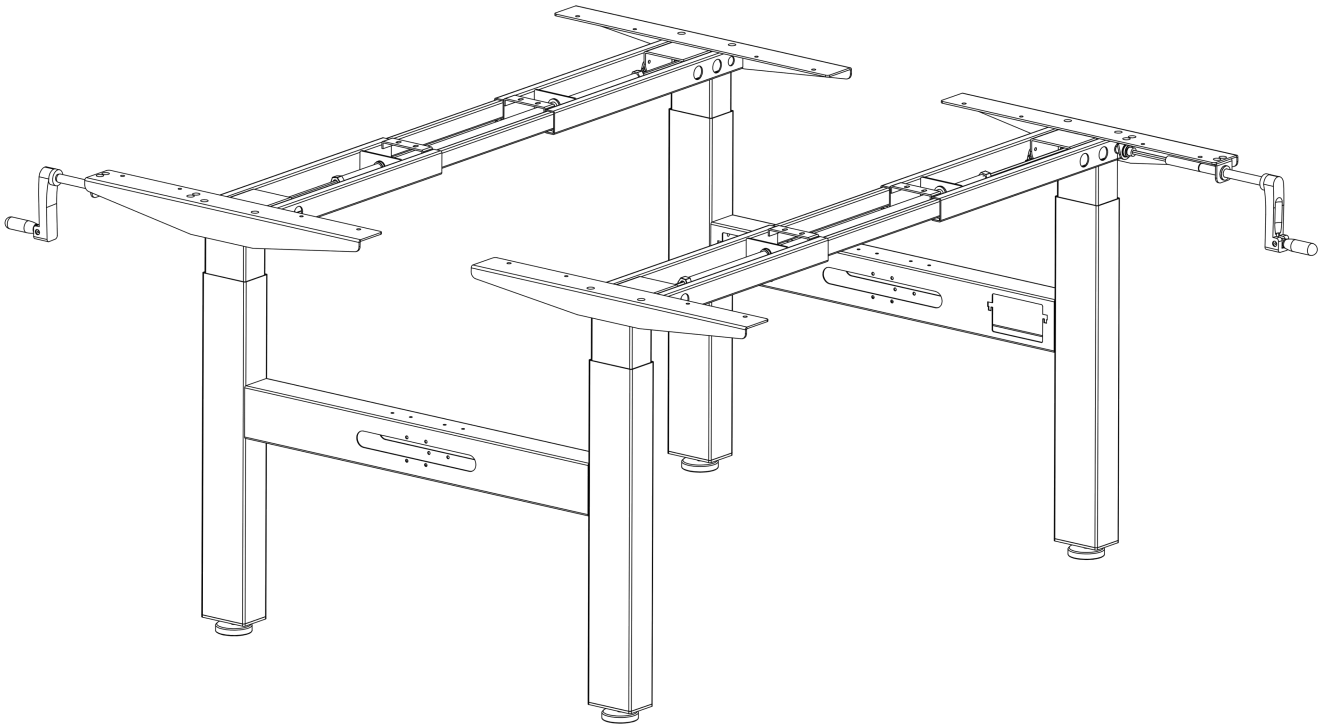

Component parts

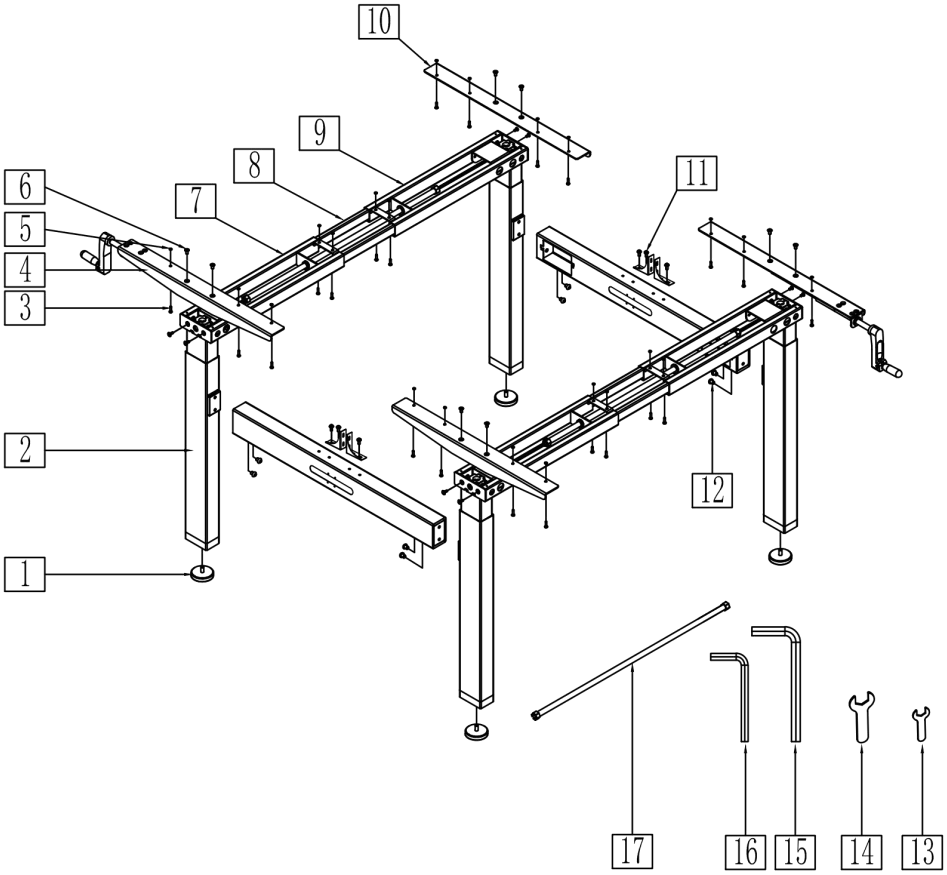

NO.	Component Name	PCS		NO.	Component Name	PCS
1	Leveling pad	4		10	Side Bracket 2	2
2	Lifting Column	4		11	Bolts M6x10	8
3	ST4x16	22		12	Bolts M8x10	8
4	Side Bracket 1	2		13	Open spanner（6mm）	1
5	Rubber pad	22		14	Open spanner（18mm）	1
6	Bolts M6x12	8		15	Allen Wrench(5mm)	1
7	Top frame -1	2		16	Allen Wrench(4mm)	1
8	Centre rails	4		17	Longer aluminium pipe	1
9	Top frame-2	2				

Assembly Instructions

Step 1

Loosen the pre-installed bolts and Adjust the length of the top frame to match the size of the table top.
If the tabletop size 1200W,please use the Shorter aluminium pipe.

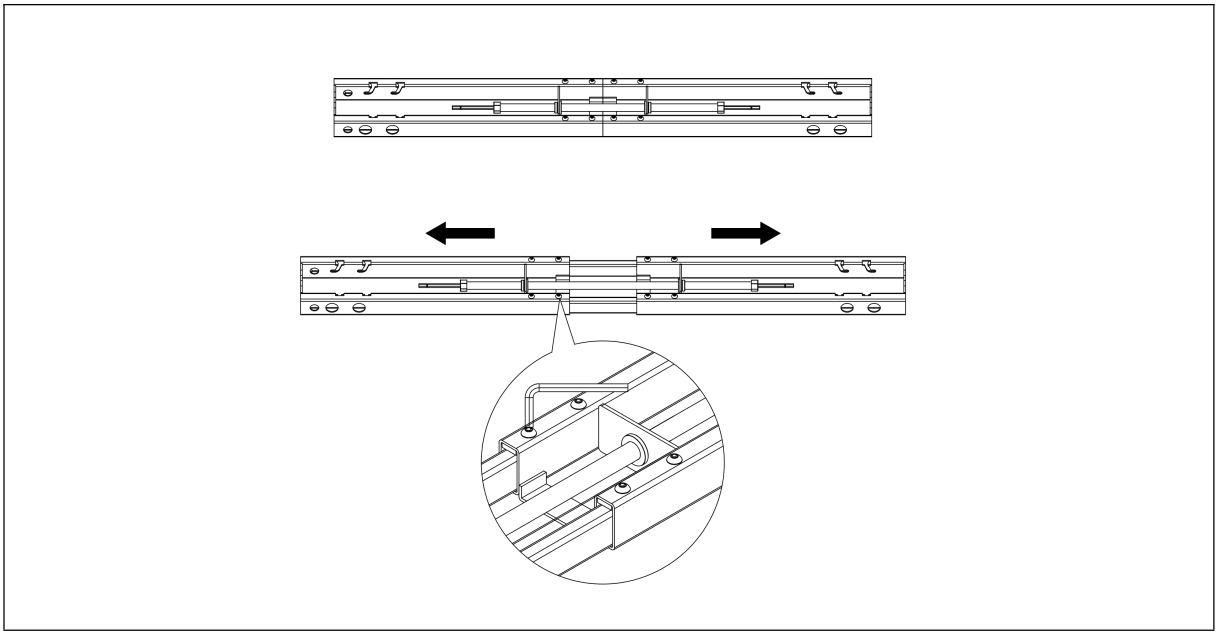

Step 2

Inset the lifting column to the top frame.
- First fix 4 pcs screws M6x10
- And then tighten the pre-installed bolts
- Installed the leveling pad.

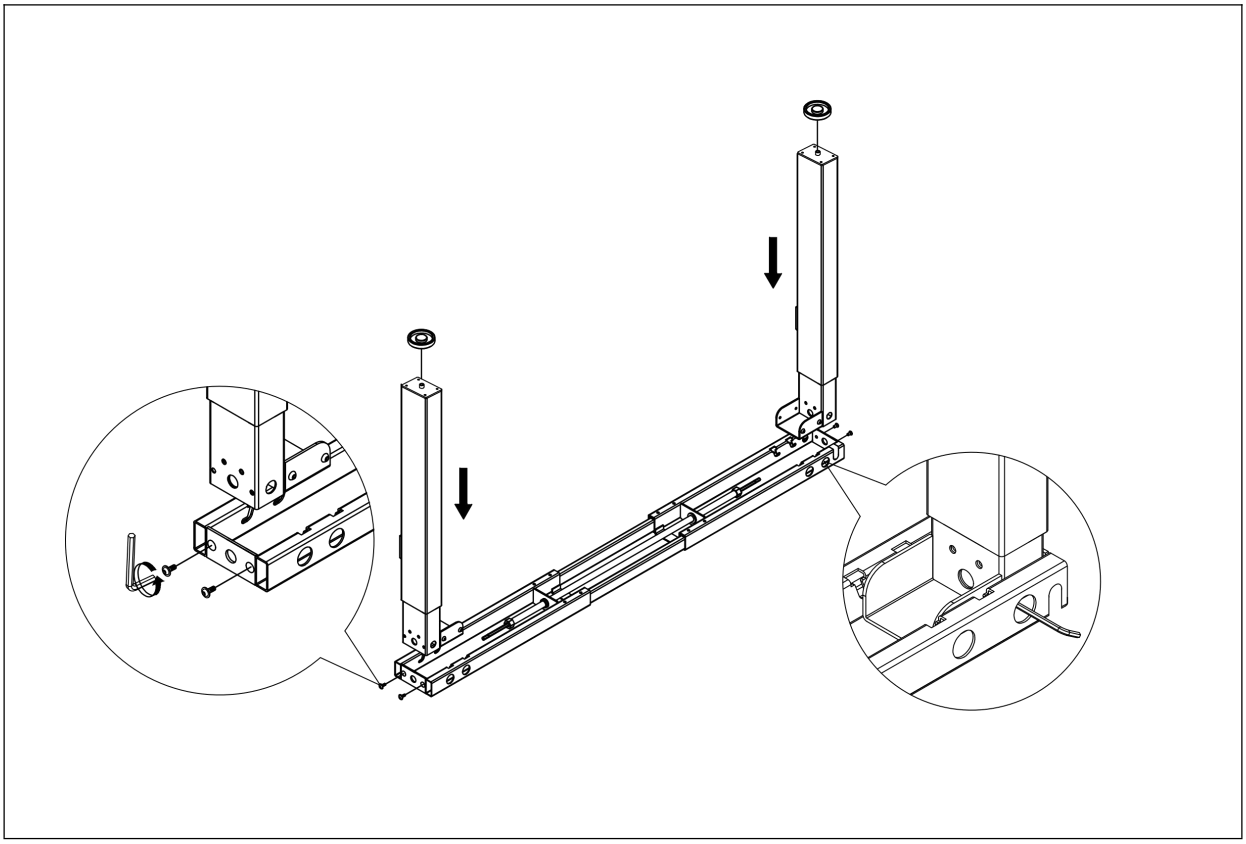

Step 3

Install the connected pipe with 8 pcs screws M8x10

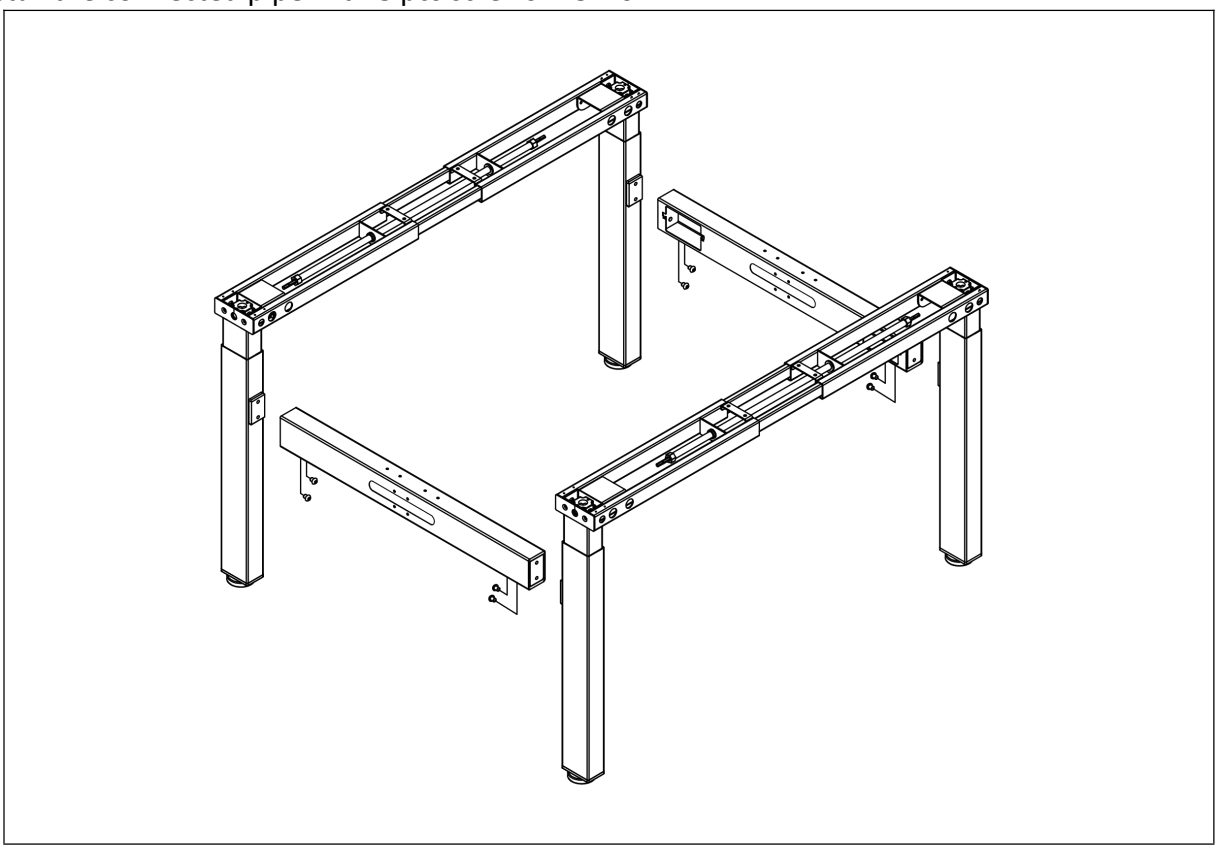

Step 4

Install the side brackets with Screws 8 pcs M6x12 screws

Insert the Hex steel rod to both lifting column and tighten it.

Install the screen brackets with 8 pcs M6x10 screws

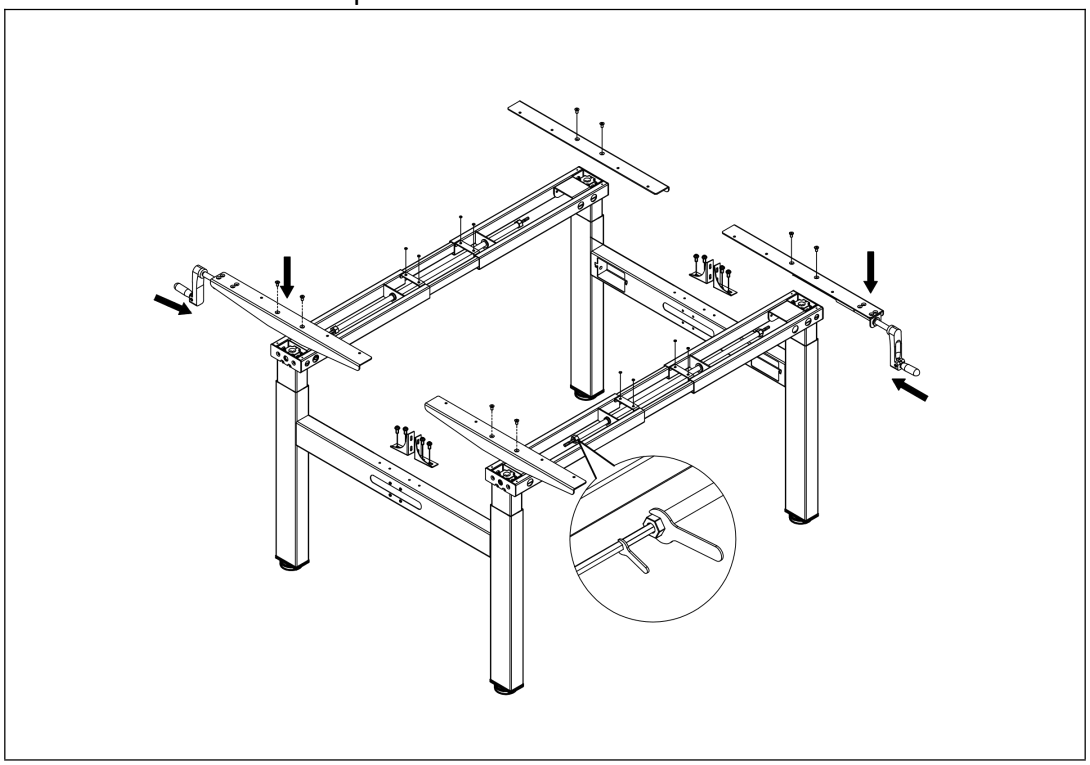

Step 5

Fix the desk frame to the tabletop with 22 PCS ST4X16 screws

Fix the manual crank holder with 4 PCS ST4X16 screws

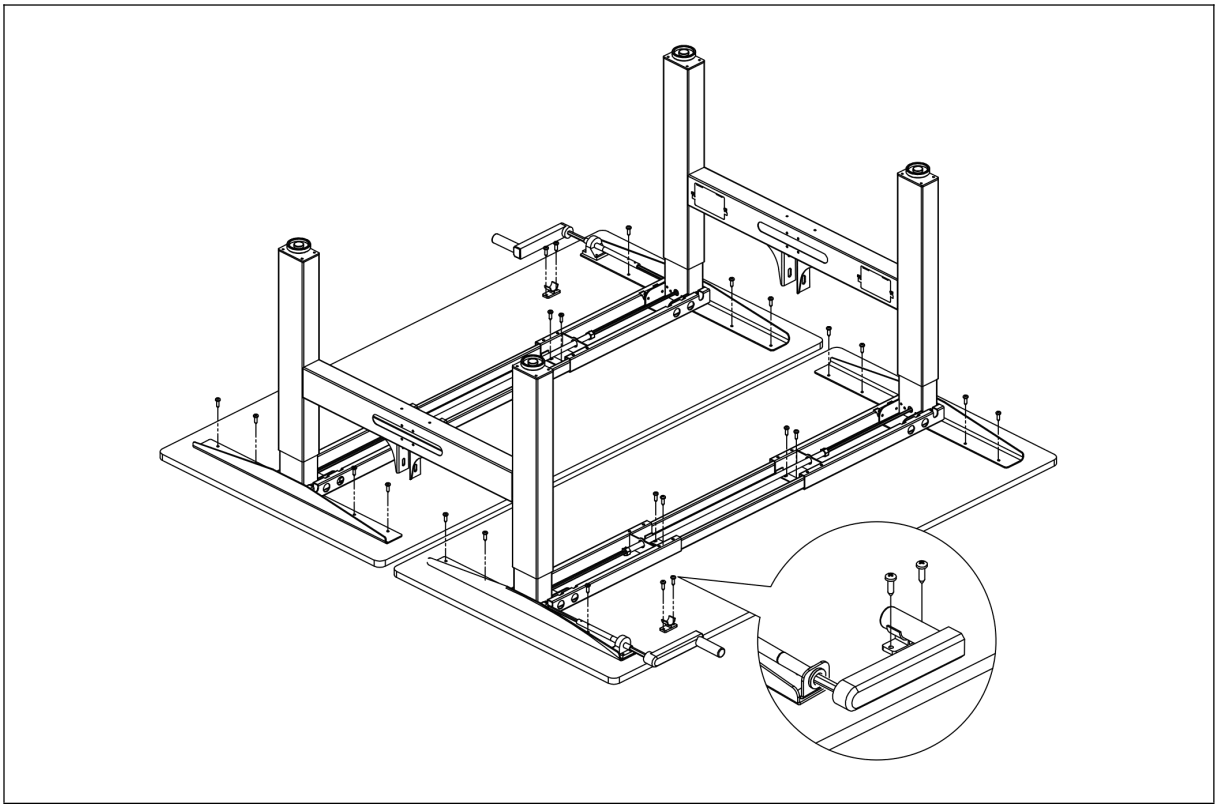

B. Technical Specifications

Load Capacity:	80Kg(Dynamic)
Speed:	10mm/ per cycle
Adjust Height:	450mm
Min. Desktop Depth Size:	675mm
Hand Crank Clockwise Rotation：	Up
Hand Crank anticlockwise Rotation：	Down

Add On : Cable tray installation

- Fix the cable tray with 8 pcs M6x10 screws to the desk frame.

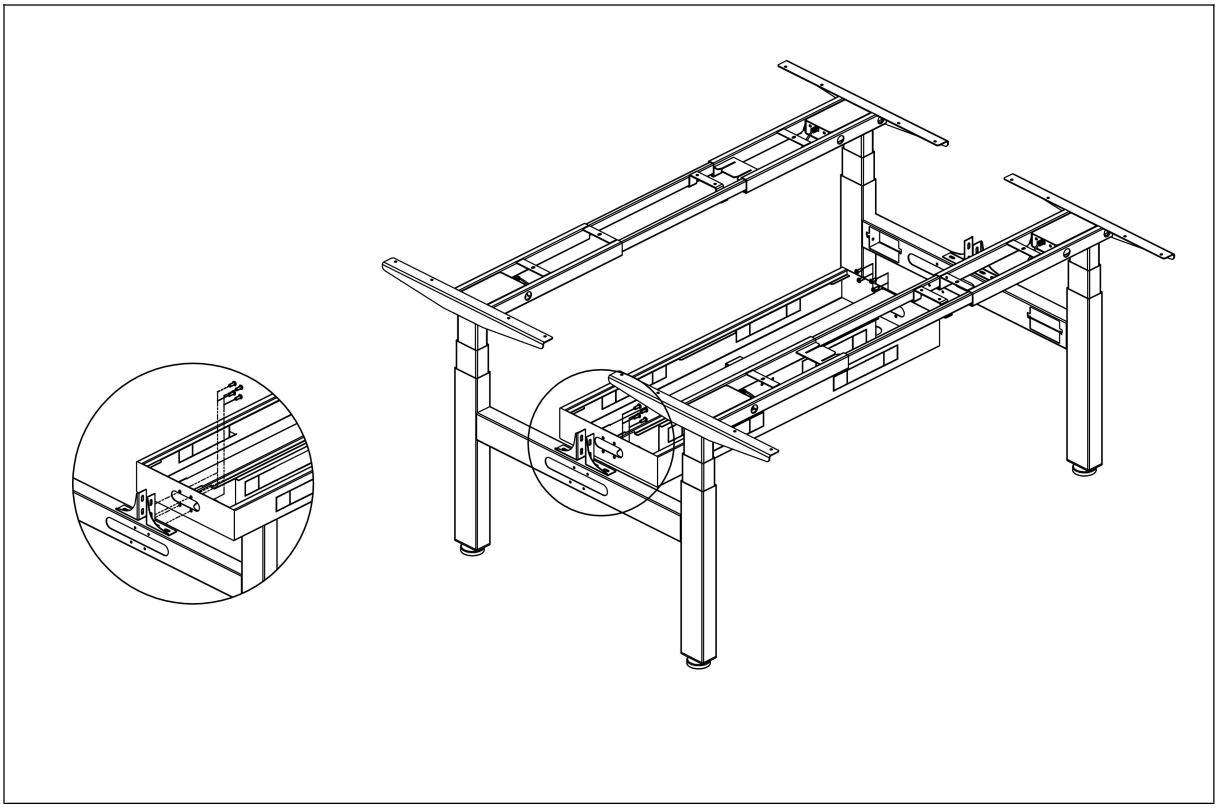

Add On : Screen panel installation

Step 1

- Insert the tapped plates to the screen panel

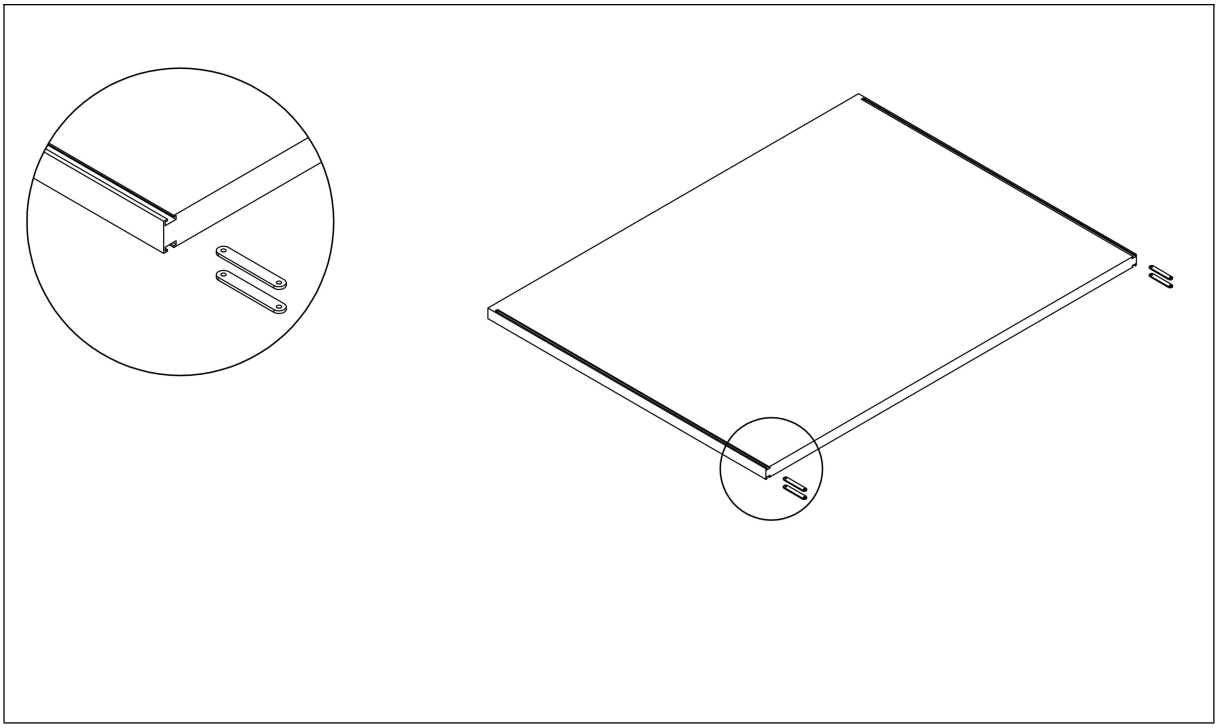

Step 2

- Install the brackets to the panel with 8 pcs M5x6 screws.

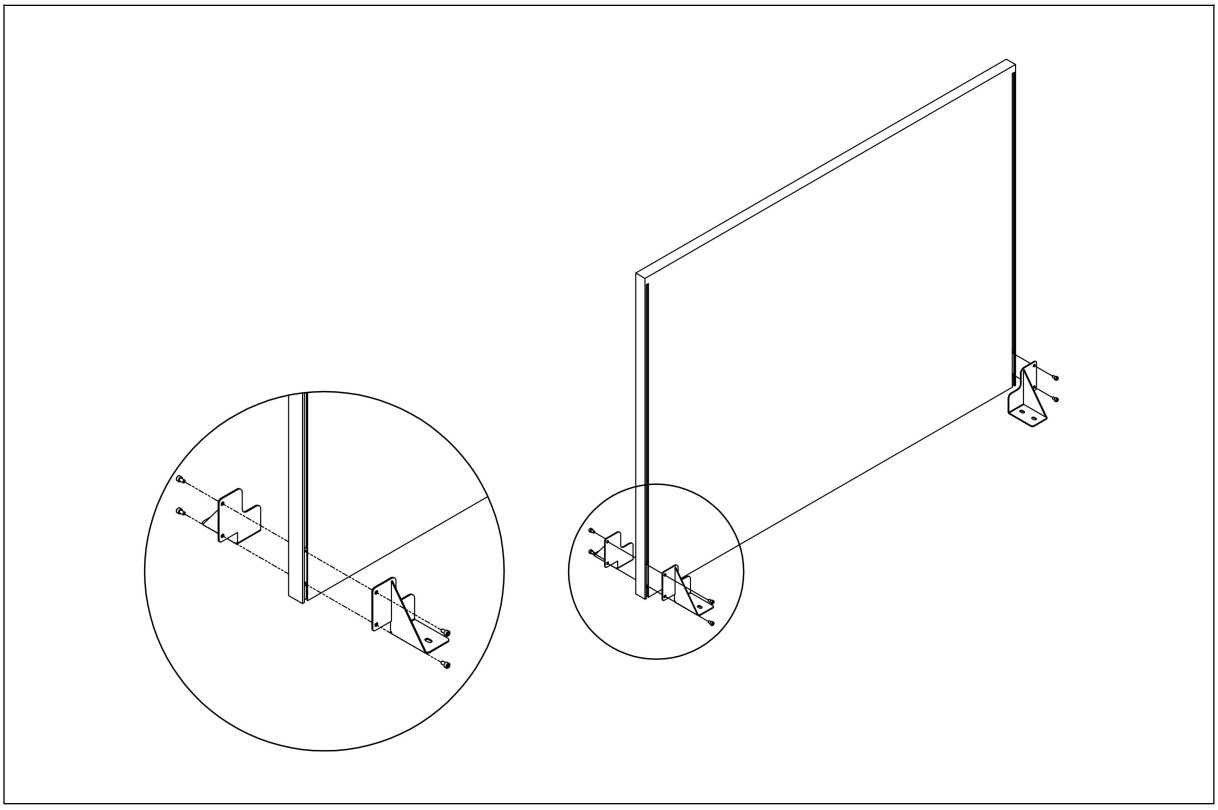

Step 3
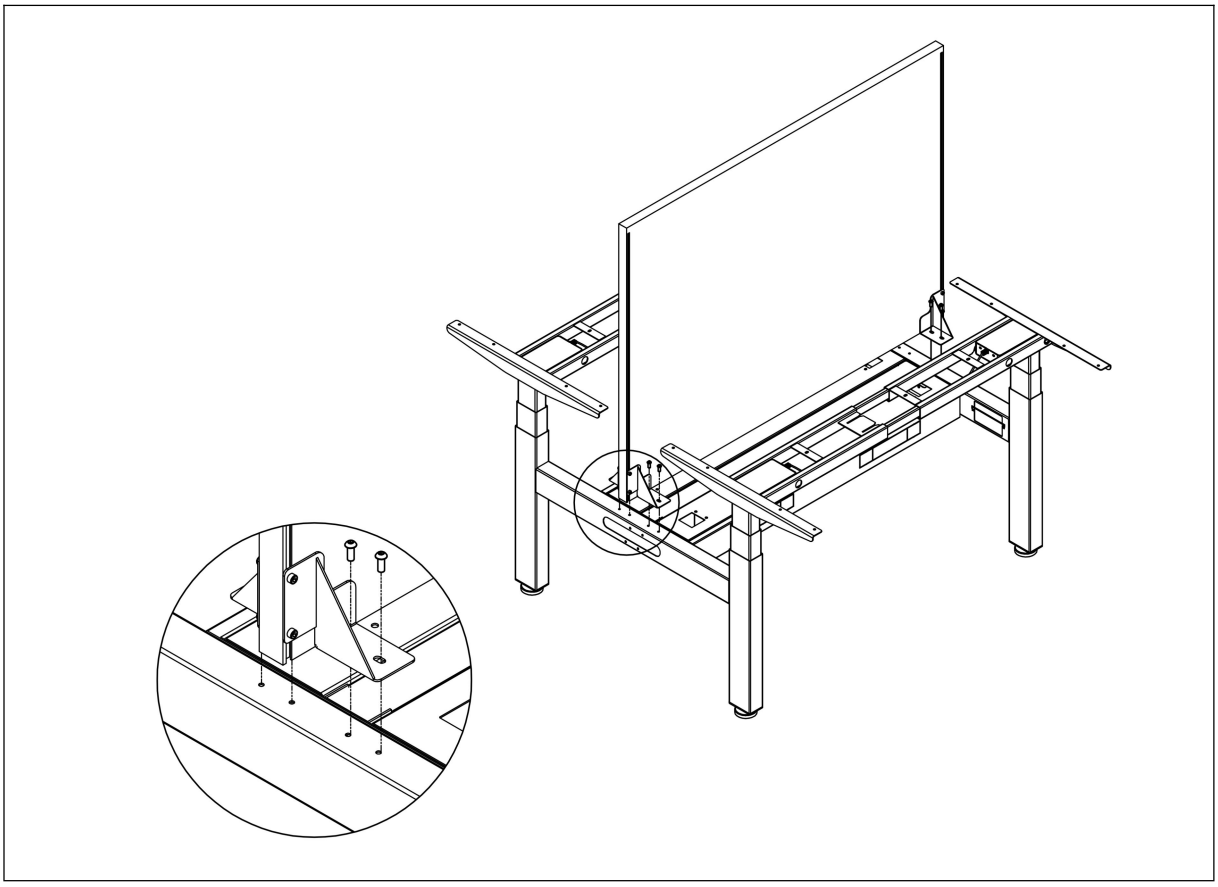
- Fix the panel to the desk frame with 8 pcs M6x10 screws.