EFIFURNITURE

# Crank height adjustable flip table (castors )

# Instruction Manual

## Table of Contents

Assembly Instructions ..... 2

Specifications ..... 5

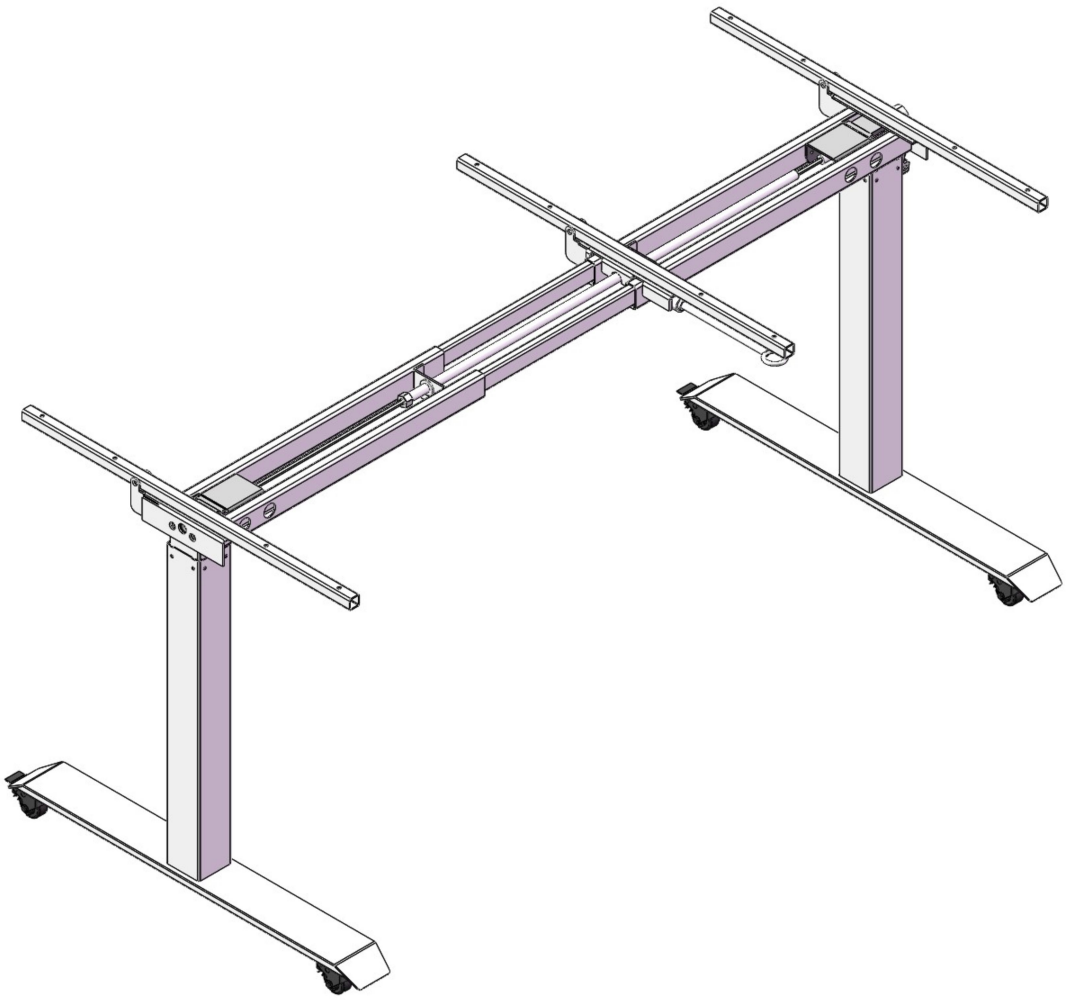

# Assembly Instructions

**Step 1**

Adjust the length of top frame

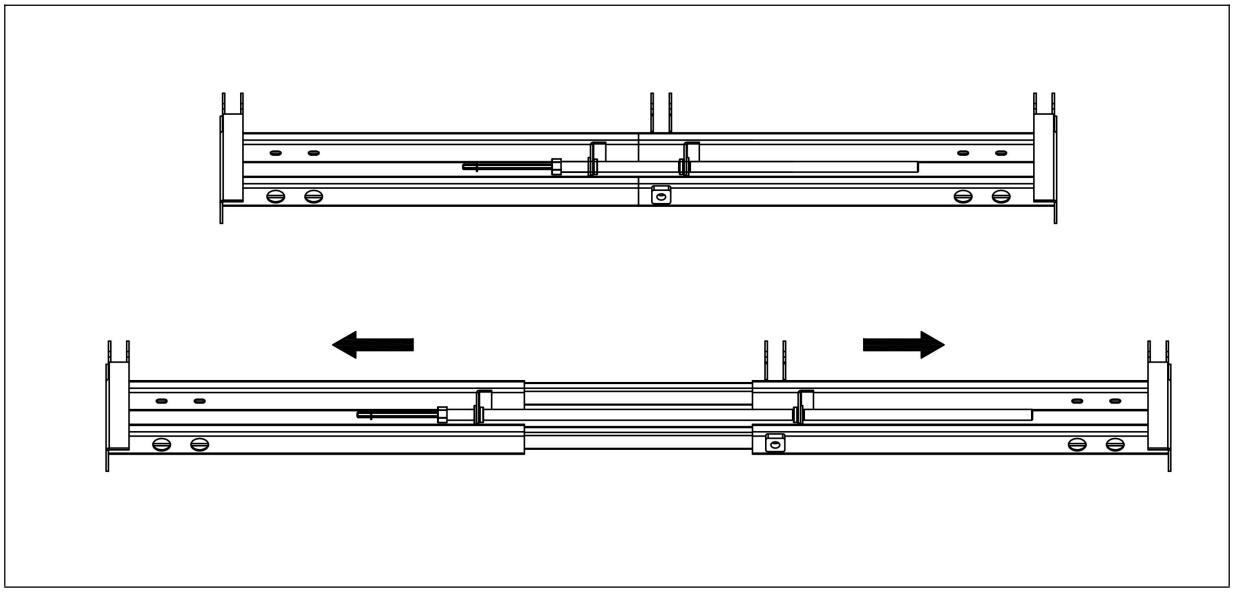

**Step 2**

Assembly the brackets to the top frame,Required Components:

Parts: M8x40 Bolts ,3 pcs

M8 Nylon nuts ,3 pcs

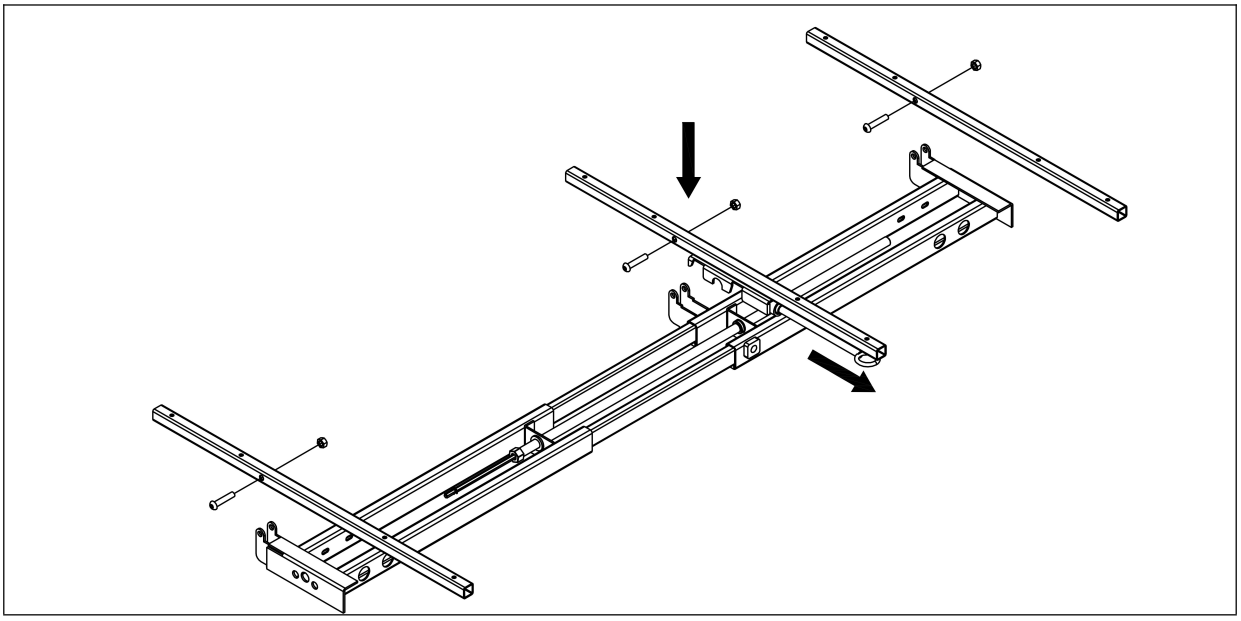

**Step 3**

Installed the lifting column to the top frame.

Required Components:

Screws M6x10 - 8pcs

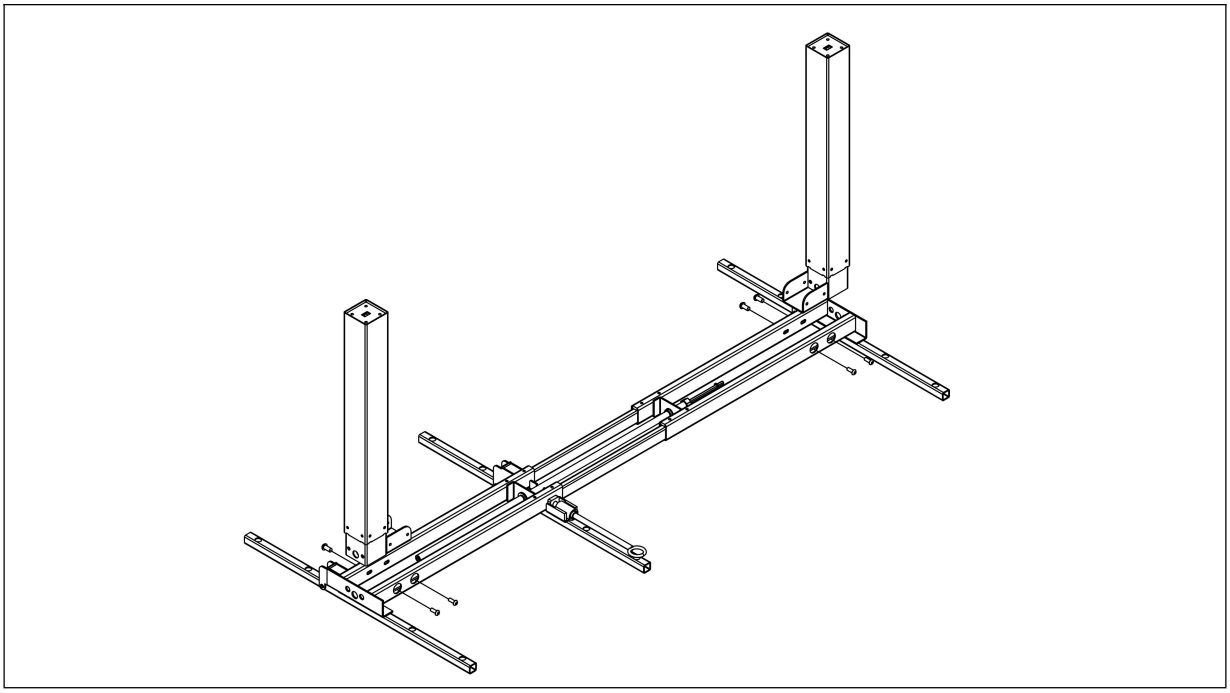

**Step 4**

Install the table feet and castors

Required parts: M6x16 bolts ,8 pcs Castors: 4 pcs

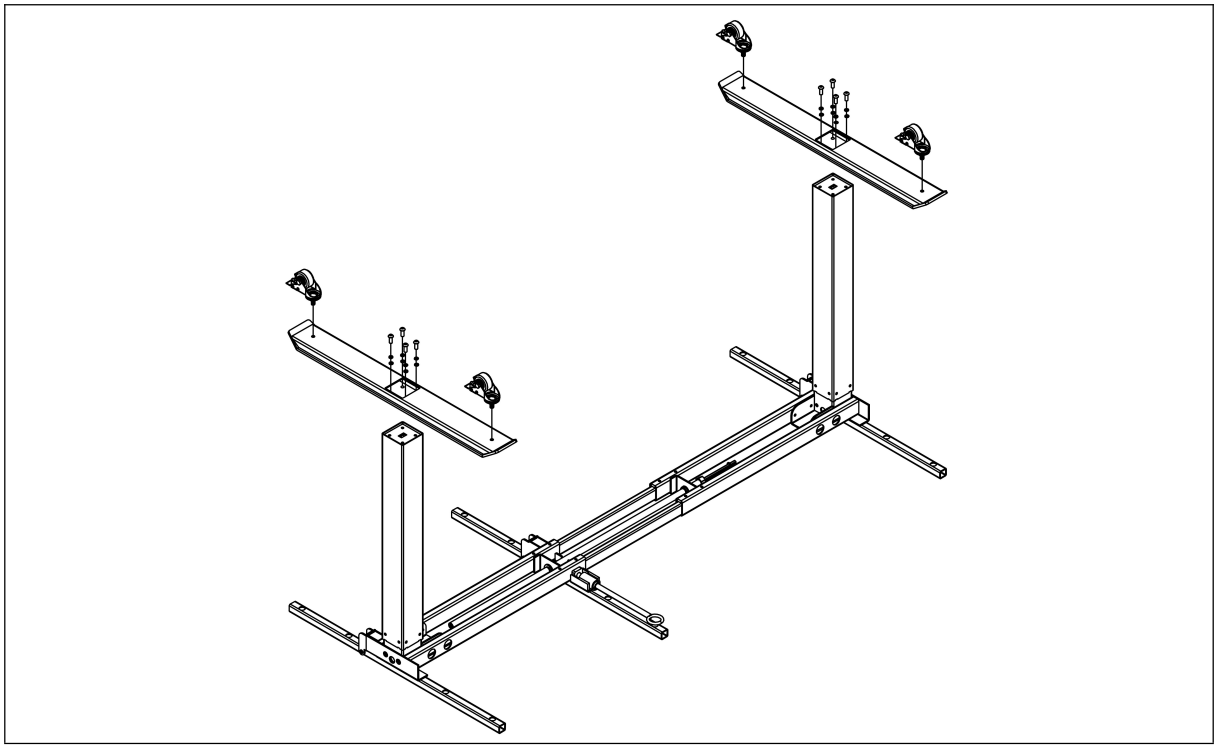

**Step 5**

Insert the crank handle and fix the pre-installed aluminum pipe screws to prevent crank handle pull out like A displayed.

Adjust the length of the top frame,tighten the aluminum pipe like B displayed.

Required parts: M6x10 bolts ,8 pcs

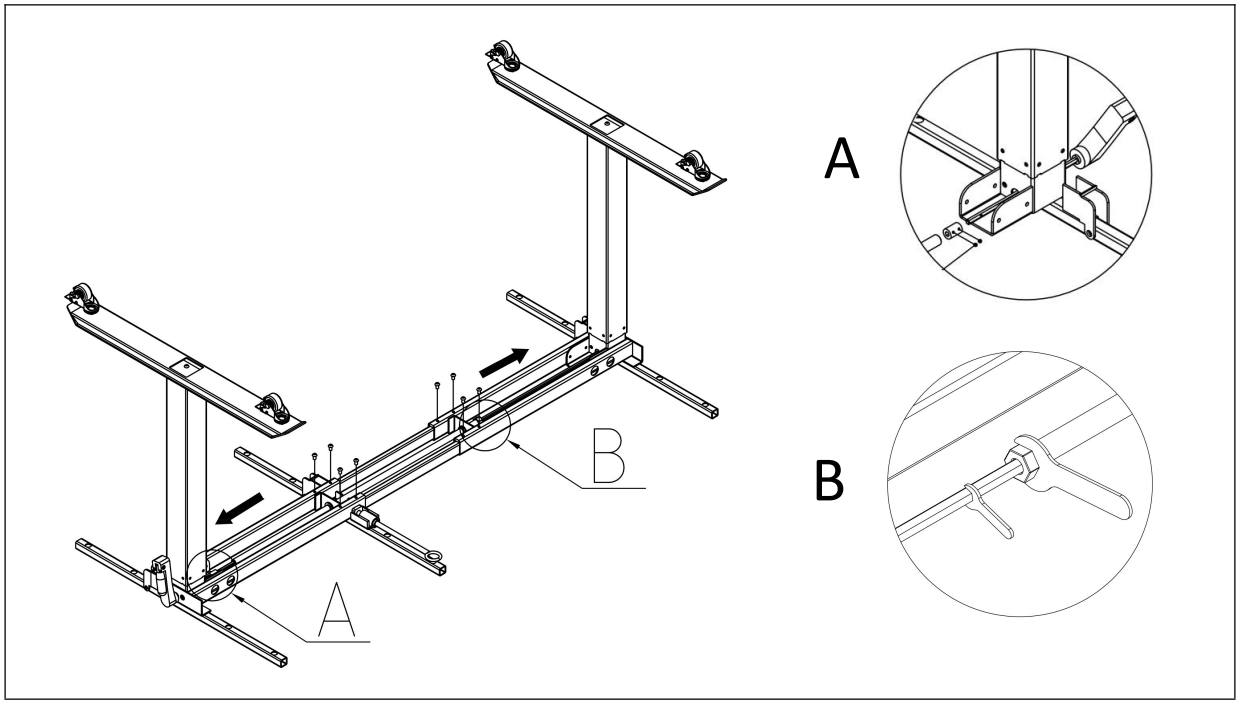


**Step 6**

Stick the rubber pads on the top frame before table top mounted,fixed with ST4x20 Screws.

Required Components:

ST4x20- 11pcs

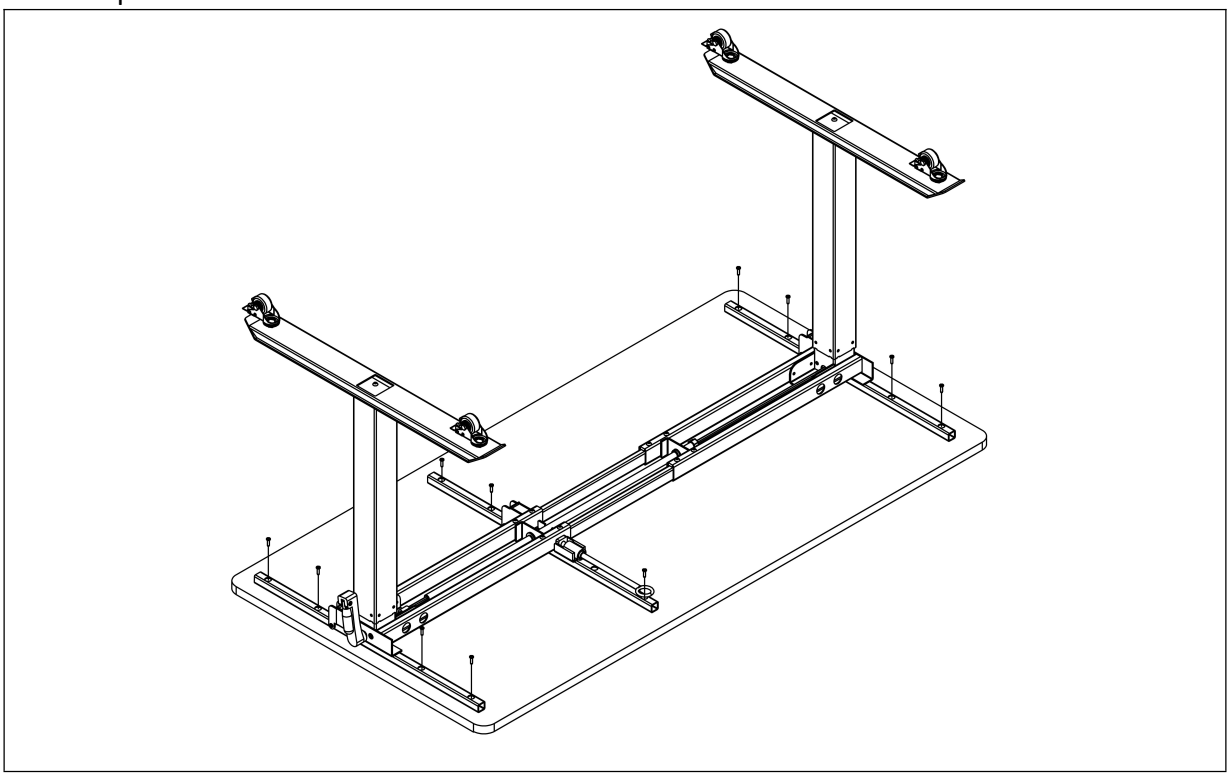

## Specifications

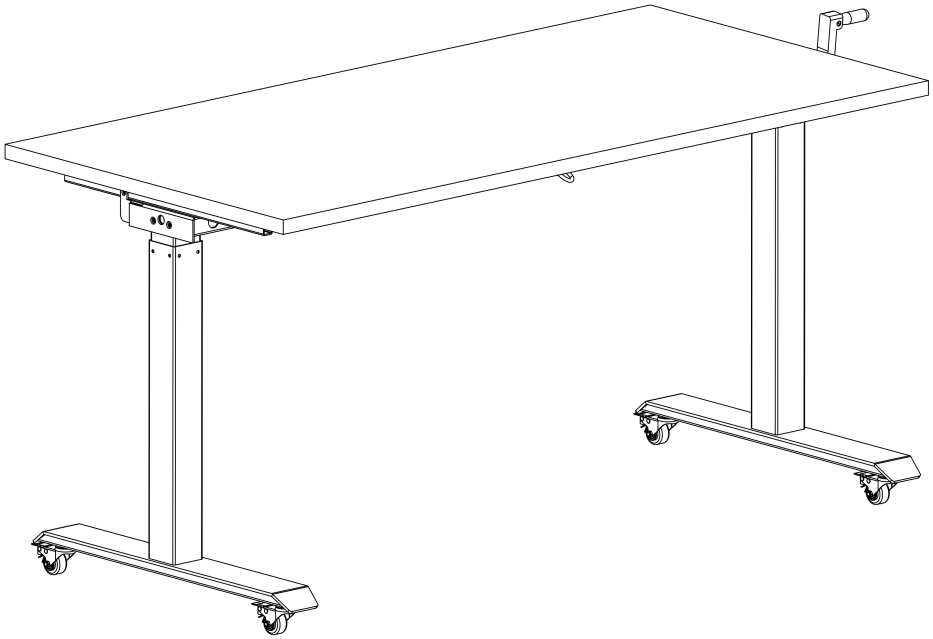

| | |
|---|---|
| **Height range** | 700-1045mm |
| **Length:** | 1200-1800mm |
| **Load capacity:** | 80KG |
| **Recommend table top** | 1200-2000mm |
| **Warranty:** | 5 Years Limited |

## Features

- Use human power” to operate UP and DOWN,Pull the handle that under desk to make tabletop flip.
- Unique width adjustable base accommodates most different-sized desktops
- Raises and lowers from 700mm to 1045mm
- Crafted from rolled stamped steel for superior strength and stability
- Offers a fine powder coat finish for maximum durability