EFIFURNITURE

Crank height adjustable flip table (castors)

Instruction Manual

Table of Contents

Assembly Instructions 2

Specifications 5

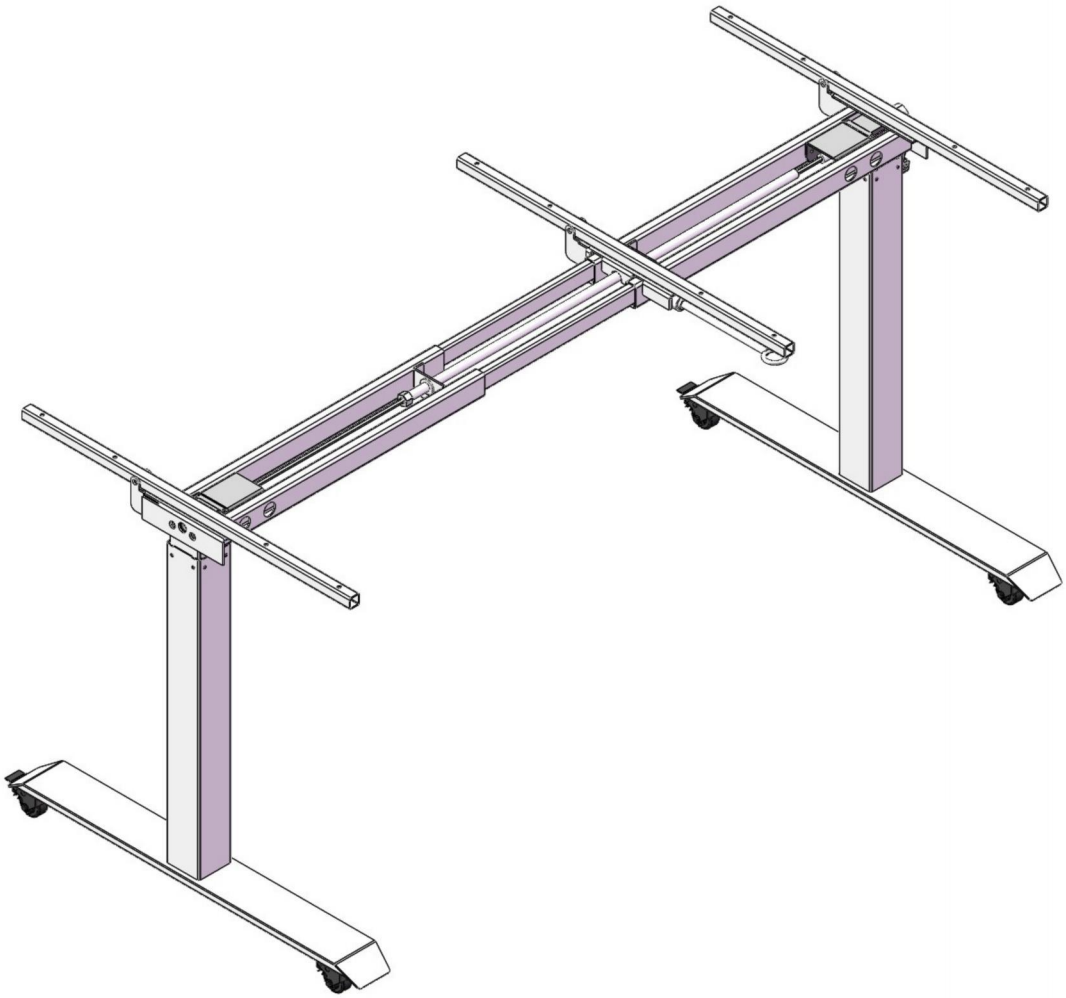

Assembly Instructions

Step 1

Adjust the length of top frame.

if the tabletop is **1800W** ,Please do Step 7 first and then follow Step 2 to Step 6.

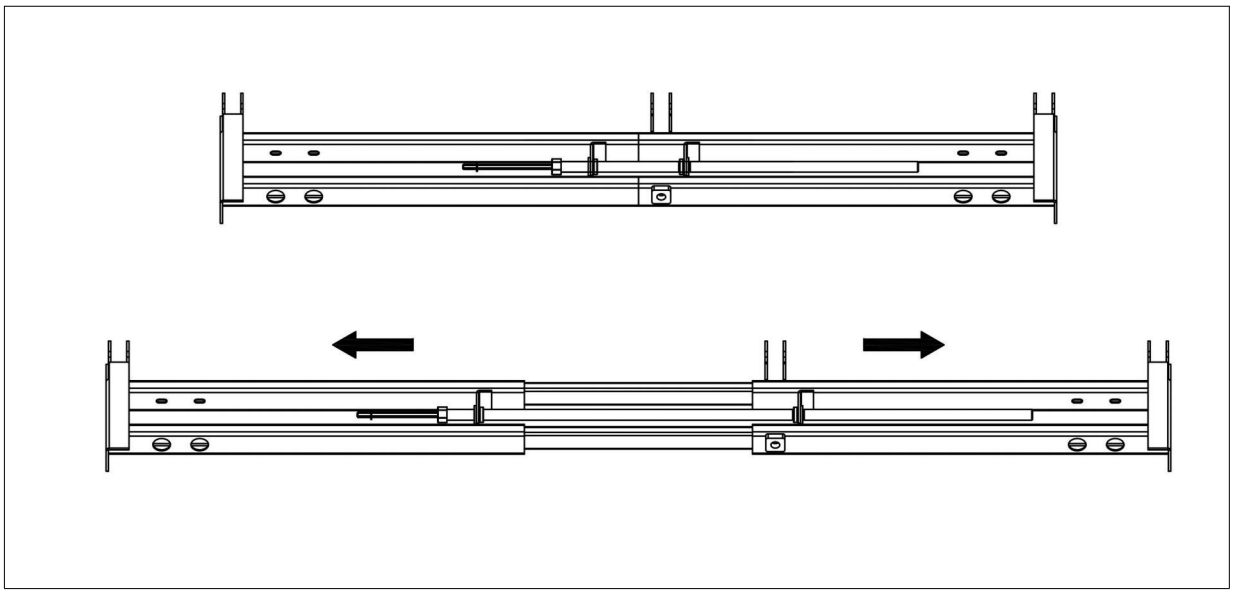

Step 2

Assembly the brackets to the top frame,Required Components:

Parts: M8x40 Bolts ,3 pcs

M8 Nylon nuts ,3 pcs

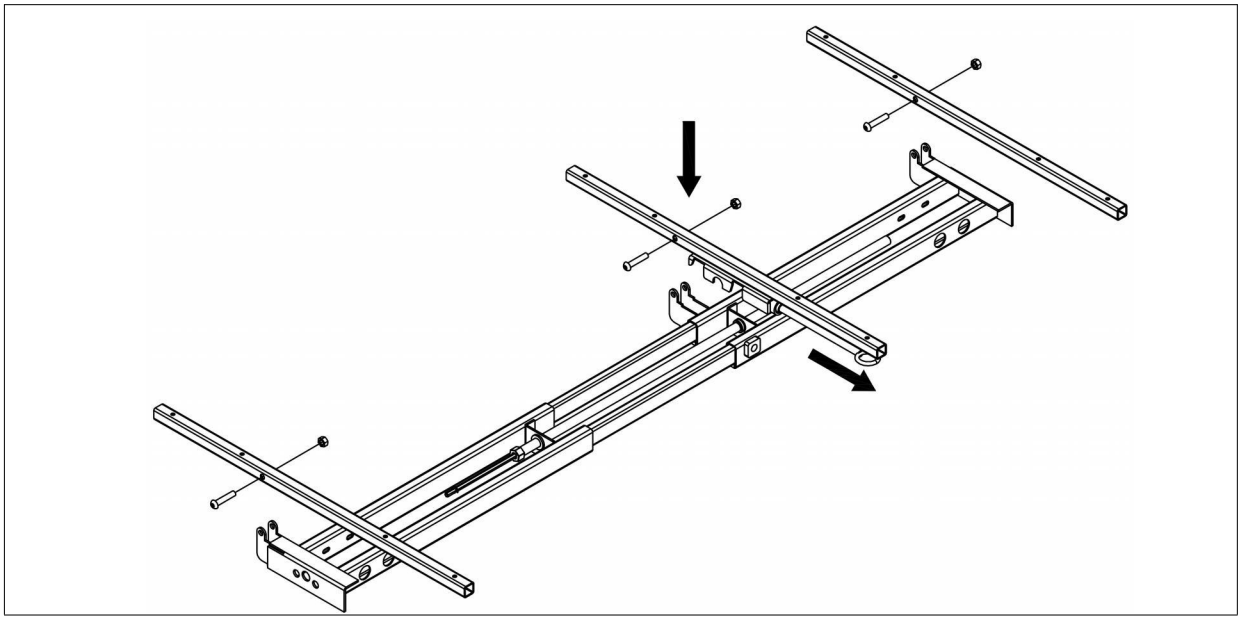

Step 3

Installed the lifting column to the top frame.

Required Components:

Screws M6x10 - 8pcs

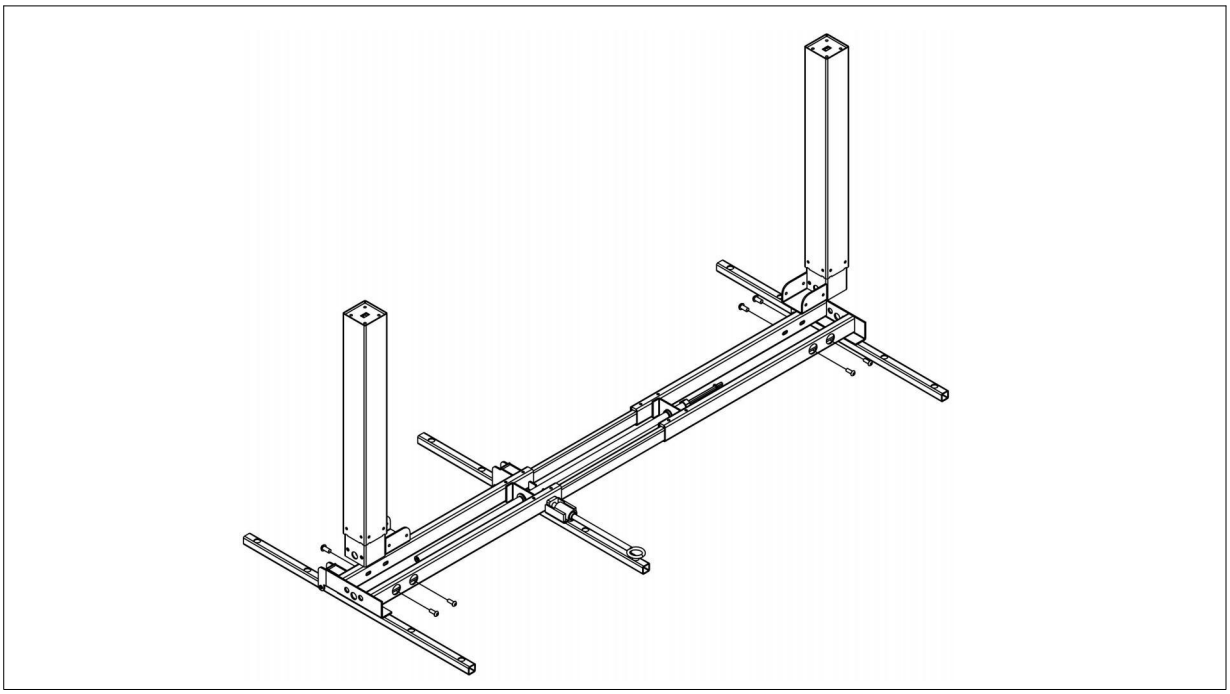

Step 4

Install the table feet and castors

Required parts: M6x16 bolts ,8 pcs Castors: 4 pcs

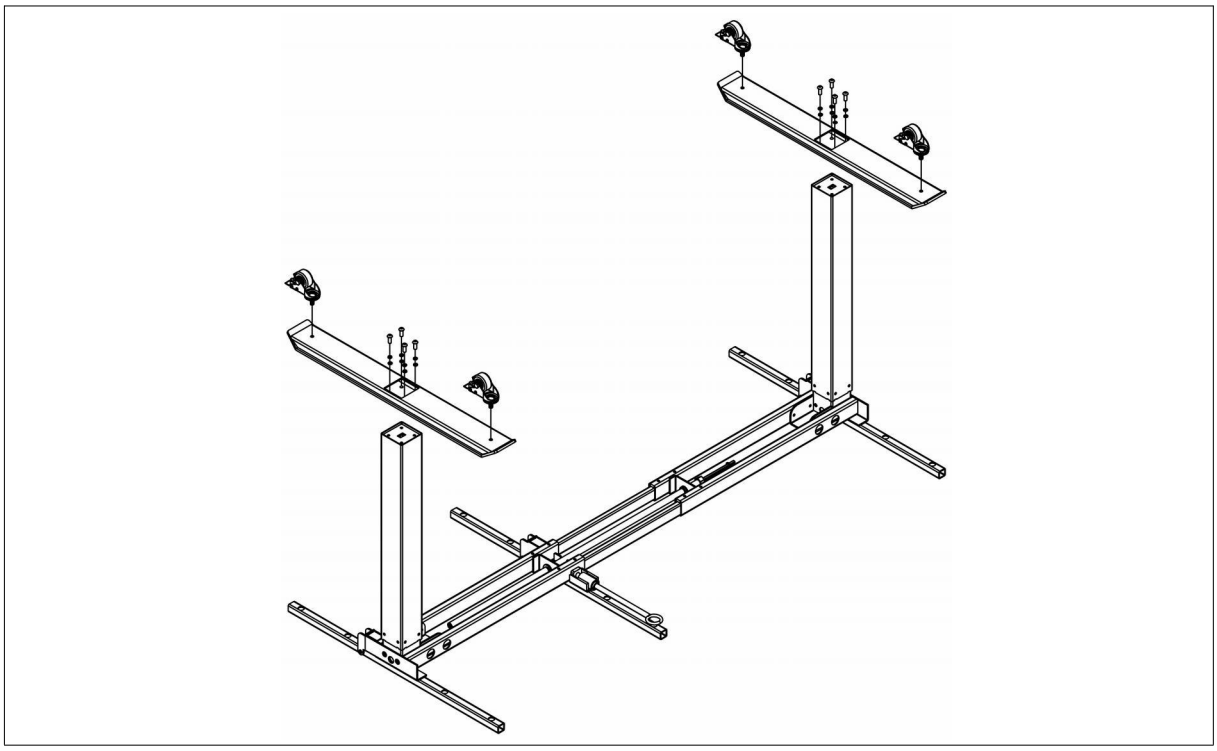

Step 5

Insert the crank handle and fix the pre-installed aluminum pipe screws to prevent crank handle pull out like A displayed.

Adjust the length of the top frame,tighten the aluminum pipe like B displayed.

Required parts: M6x10 bolts ,8 pcs

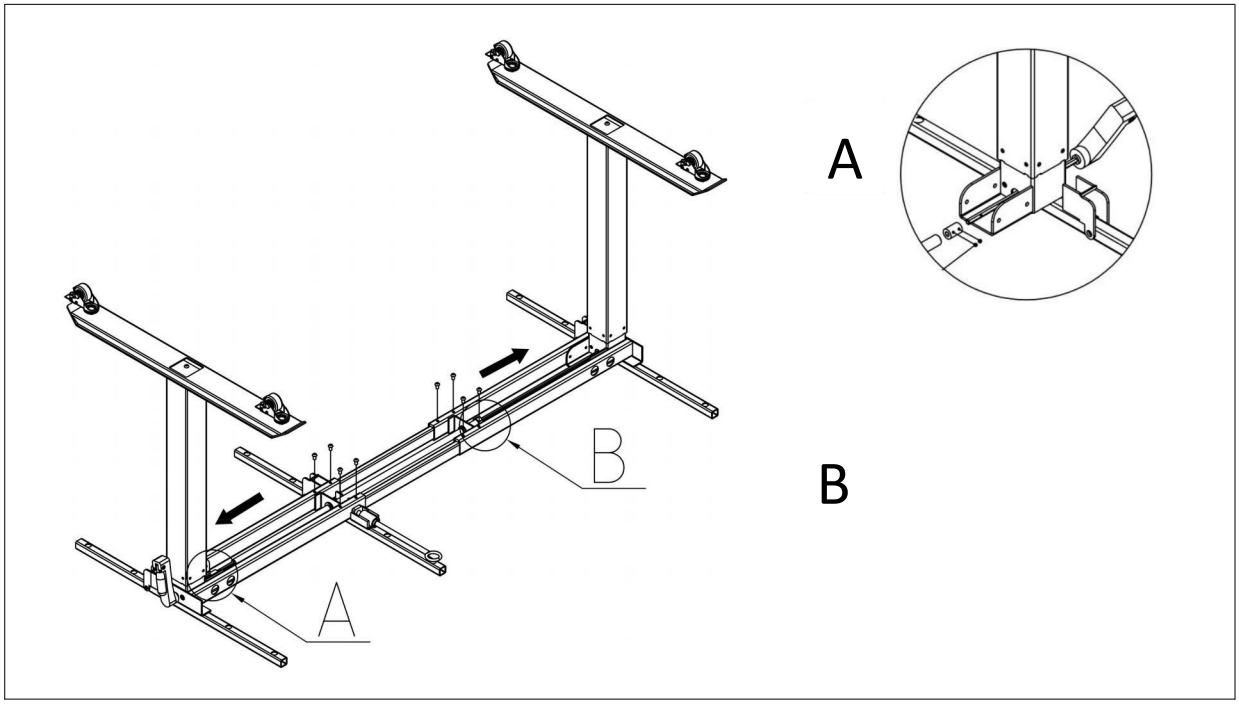

Step 6

Stick the rubber pads on the top frame before table top mounted,fixed with ST4x20 Screws.

Required Components:

ST4x20- 11pcs

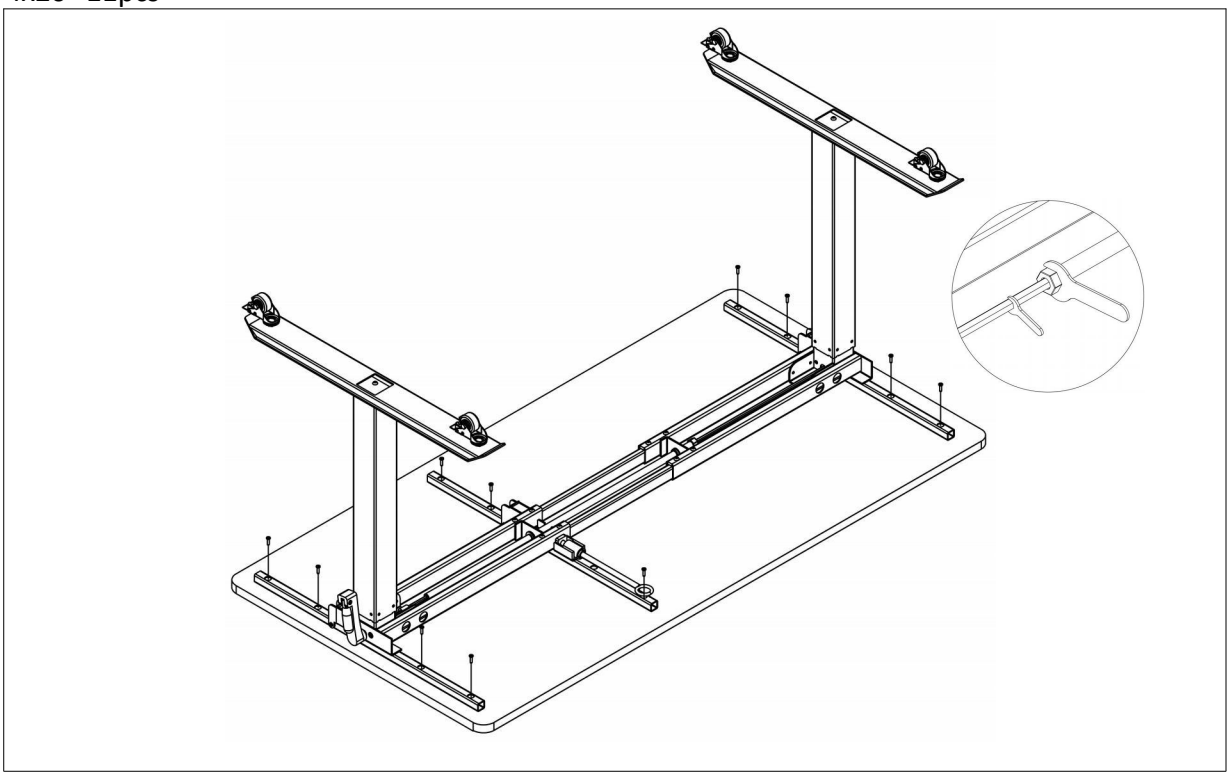

Step 7

Replace a longer aluminum pipe to fit for a 1800W tabletop.

- Remove the circlip and plastic nut, please keep it for the future steps.

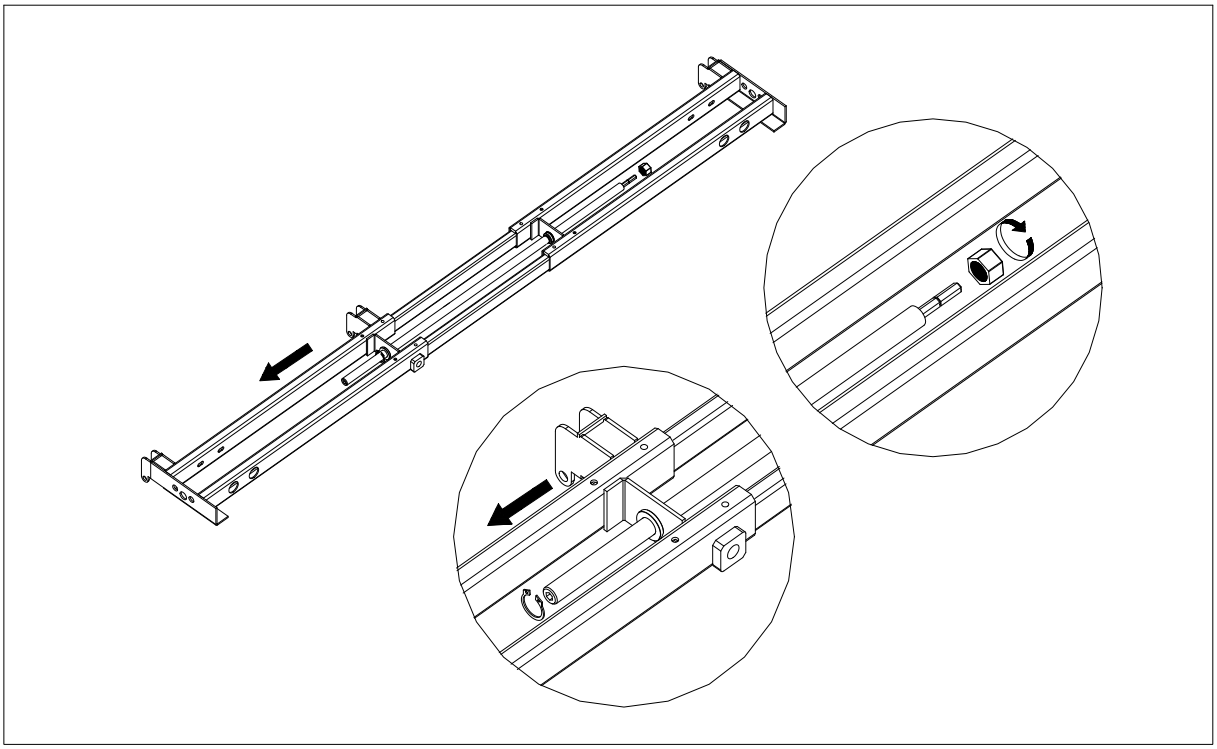

- Place the longer aluminium pipe, install the circlip and plastic nut back.

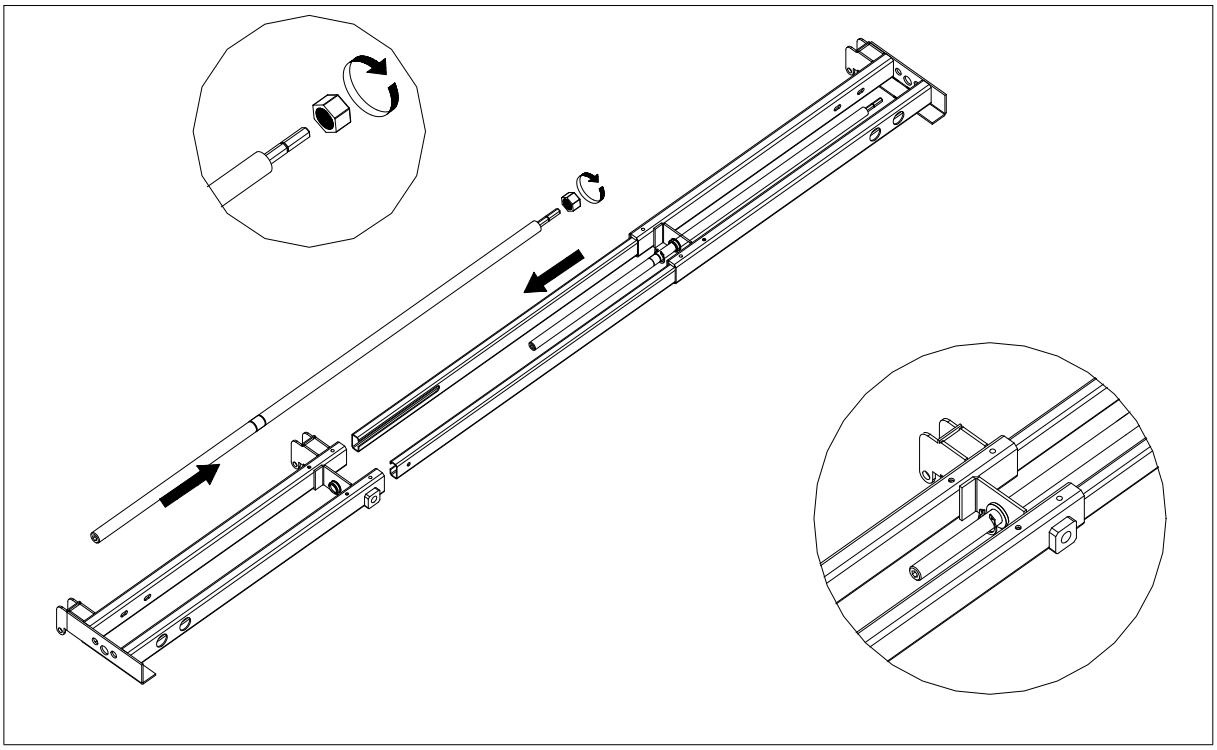

Specifications

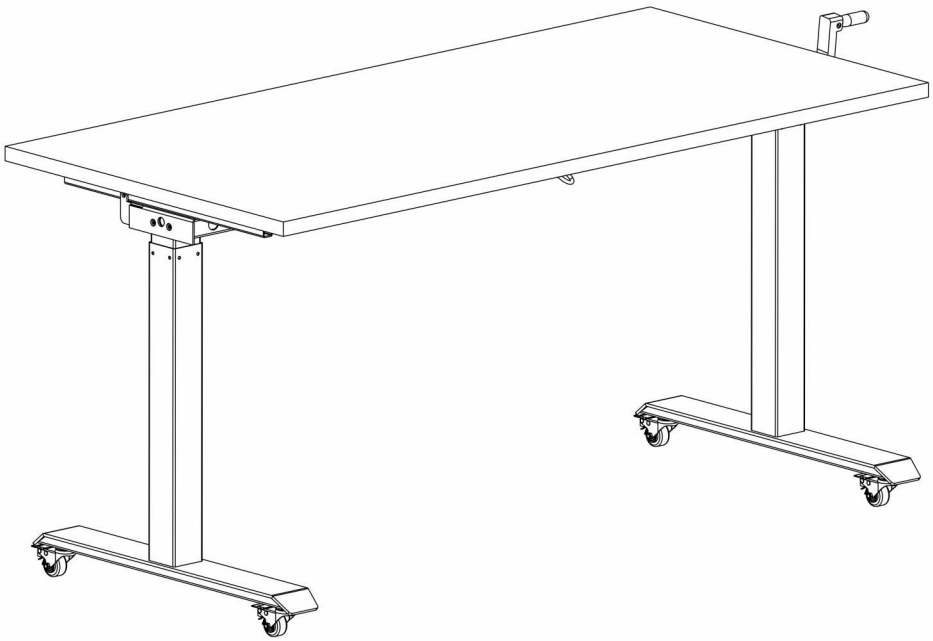

Height range	700-1045mm
Length:	1200-1800mm
Load capacity:	80KG
Recommend table top	1200-2000mm
Warranty:	5 Years Limited

Features

- Use human power" to operate UP and DOWN,Pull the handle that under desk to make tabletop flip.
- Unique width adjustable base accommodates most different-sized desktops
- Raises and lowers from 700mm to 1045mm
- Crafted from rolled stamped steel for superior strength and stability
- Offers a fine powder coat finish for maximum durability