EFIFURNITURE

Boost Crank

Height Adjustable Desk Return frame

Instruction Manual

Table of Contents

Component parts 2

Assembly Instructions 3

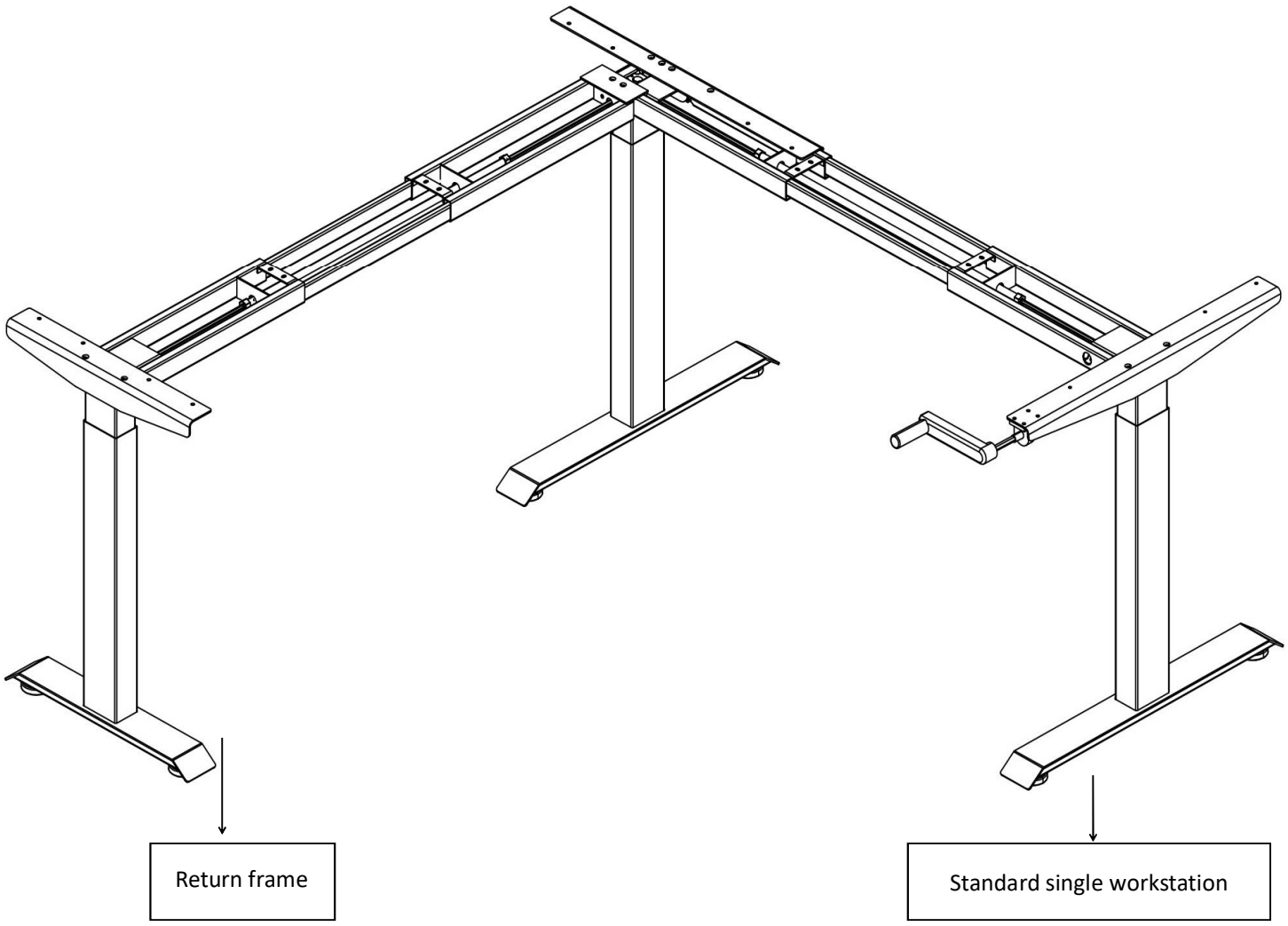

Component parts

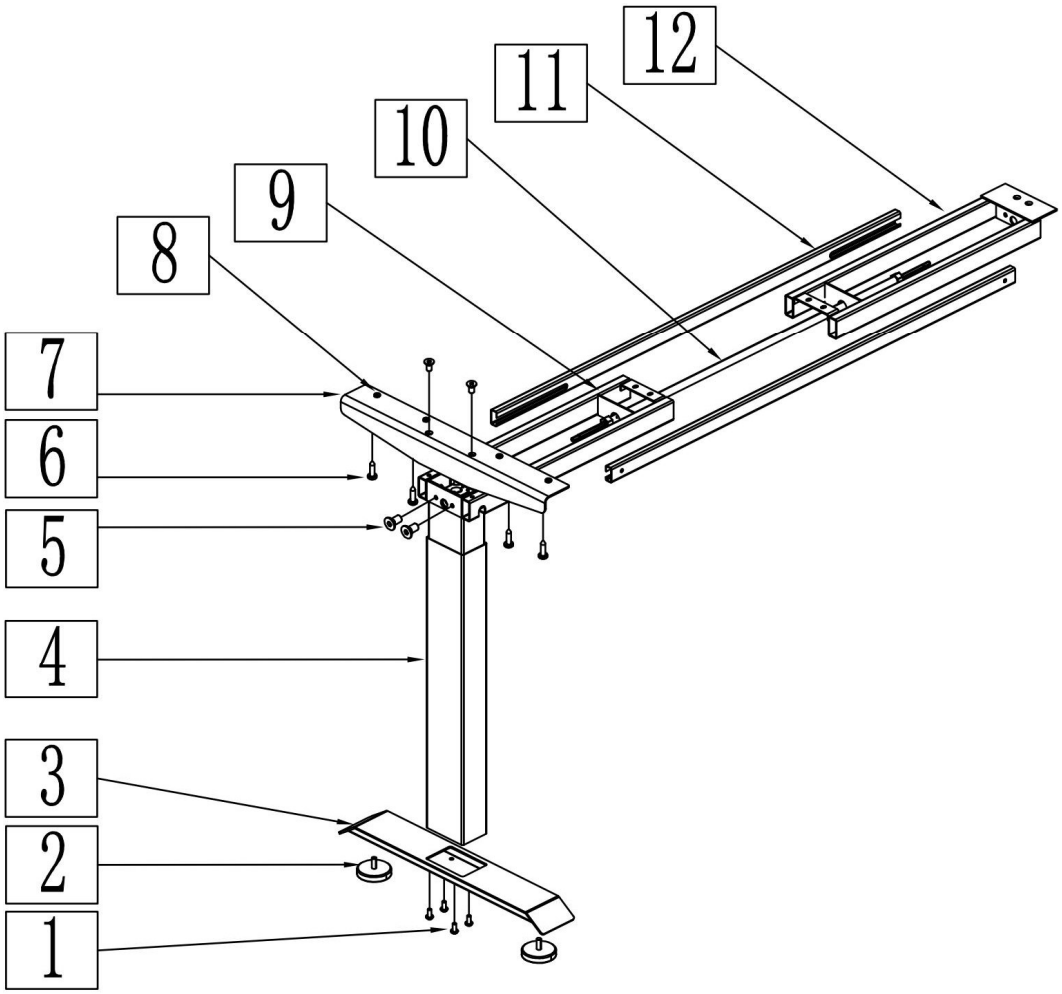

NO.	Component Name	PCS		NO.	Component Name	PCS
1	Hand bolts M6x10	4		10	transmit	1
2	Leveling pads	2		11	Centre bracket	2
3	Table feet	1		12	Top frame-2	1
4	Lifting column	1				
5	Bolt: M6x12	6				
6	Screw:ST4x16	8				
7	Side brackets	1				
8	Rubber pad	8				
9	Top frame-1	1				

Assembly Instructions

Step 1

Loosen the pre-installed bolts and Adjust the length of the top frame to match the size of the table top.

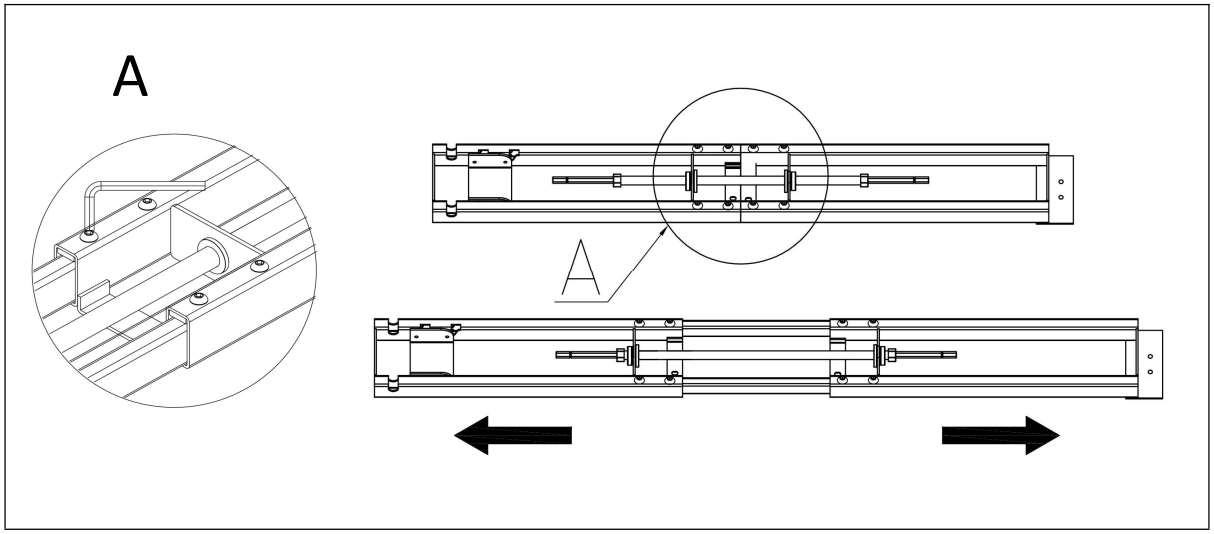

Step 2

Inset the lifting column to the top frame.
- First fix 2pcs screws M6x12 like **B** displayed
- And then tighten the pre-installed bolts like C displayed

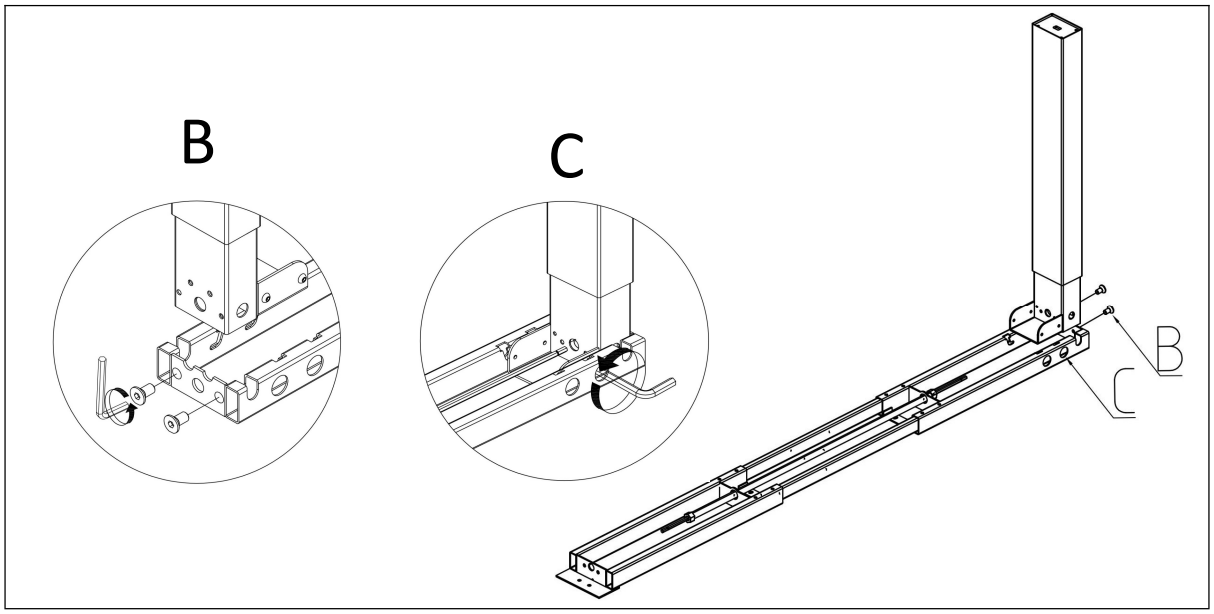

Step 3

- Install the table feet with 4 PCS M6X16 bolts
- Install the leveling feet

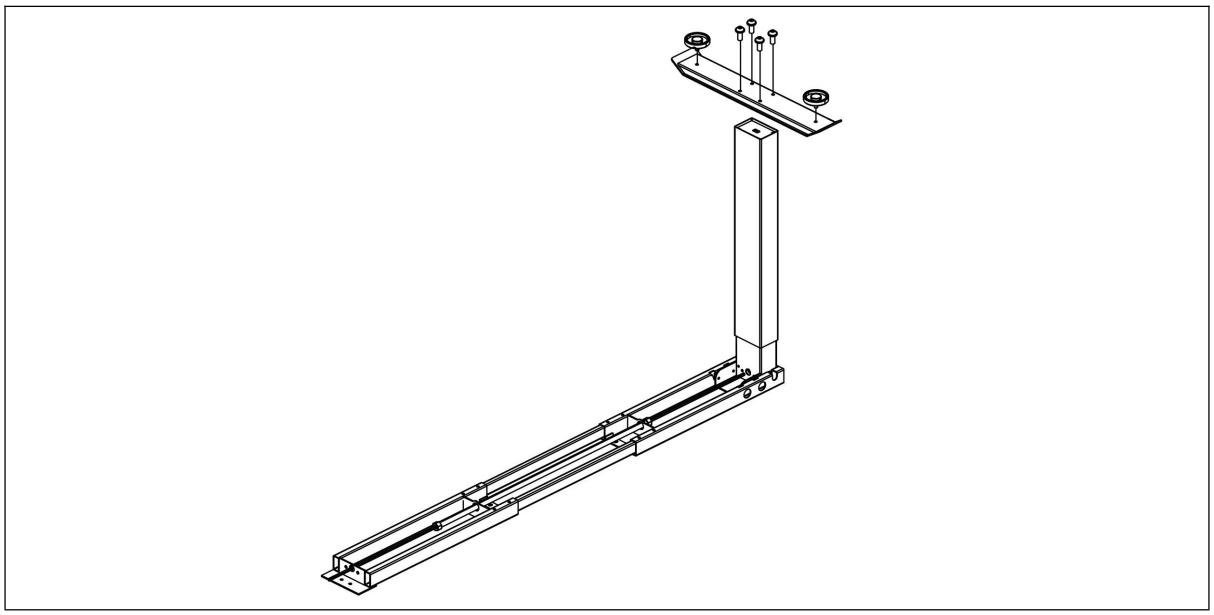

Step 4

Install the side bracket with 2 PCS M6x12 Bolts

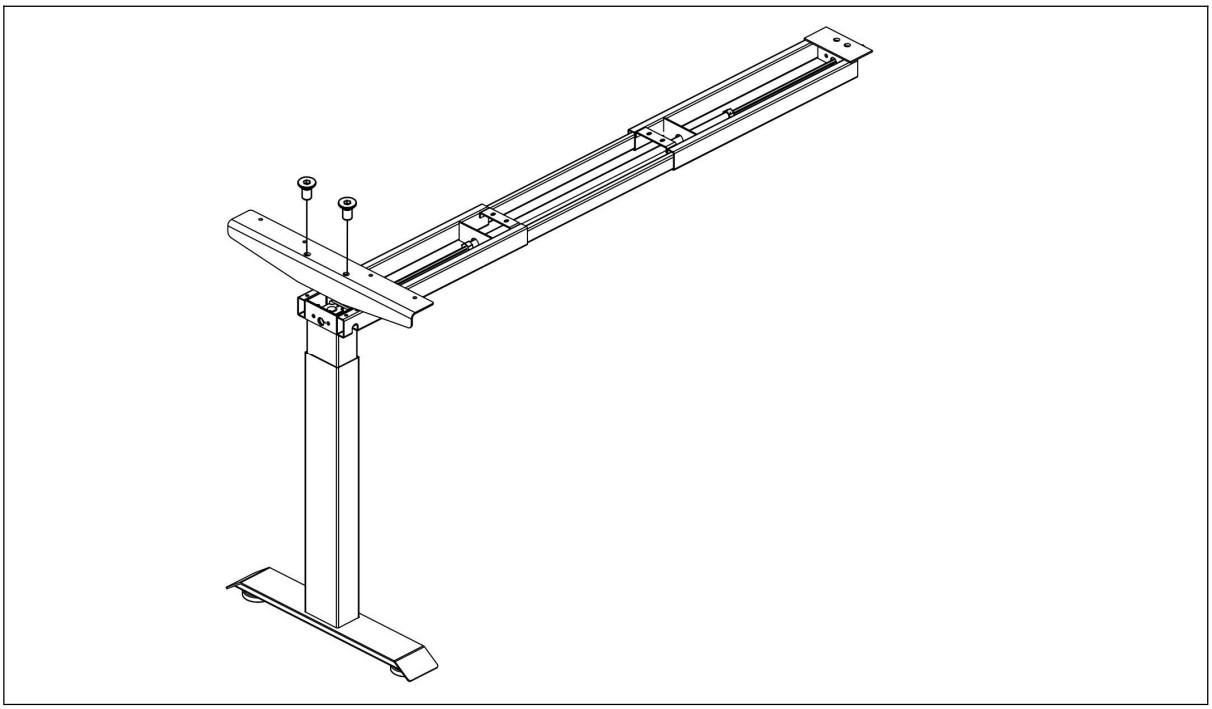

Step 5

Connect the return frame to the single desk and fix it with 2 PCS M6x12 Bolts
Adjust the side bracket to align the return frame and fix it with 2 PCS M6x12 Bolts
Insert the hex steel rod to the single workstation and tighten it.

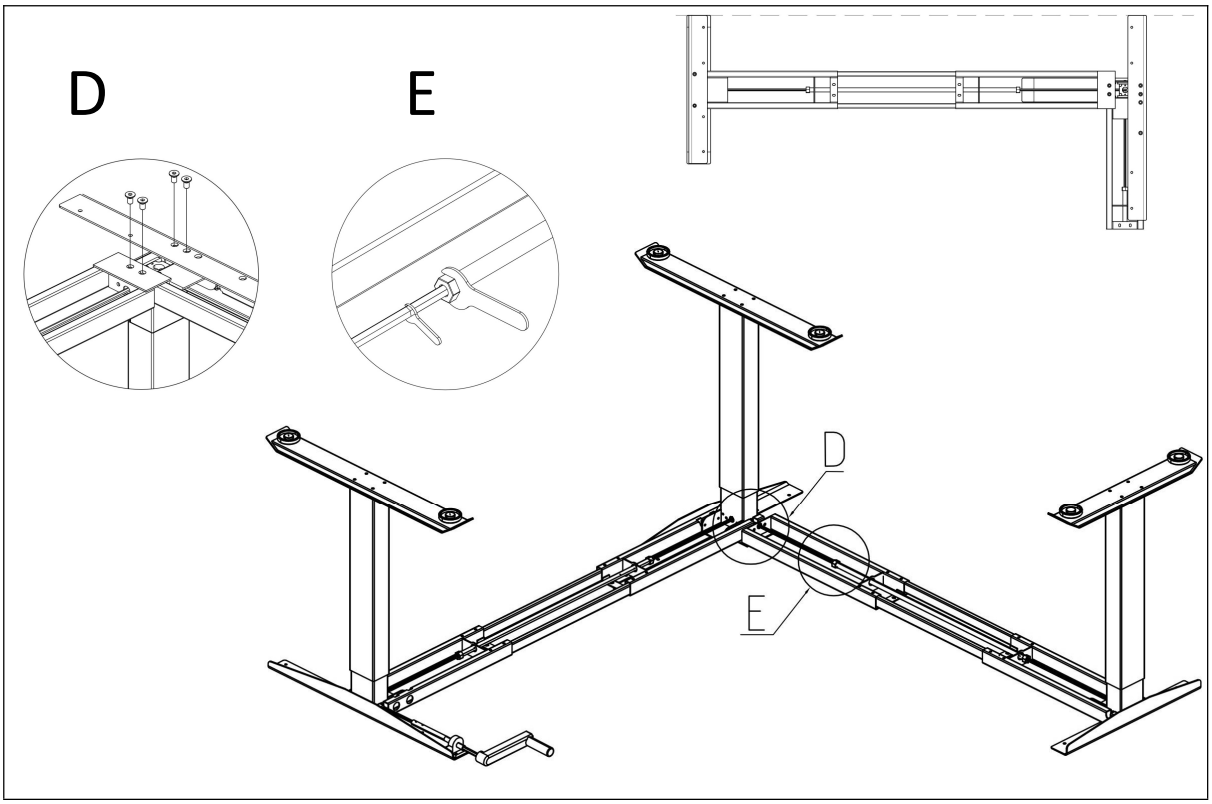

Step 6

Fix the desk frame to the tabletop with 17 PCS ST4X16 screws
Fix the manual crank holder with 2 PCS ST4X16 screws

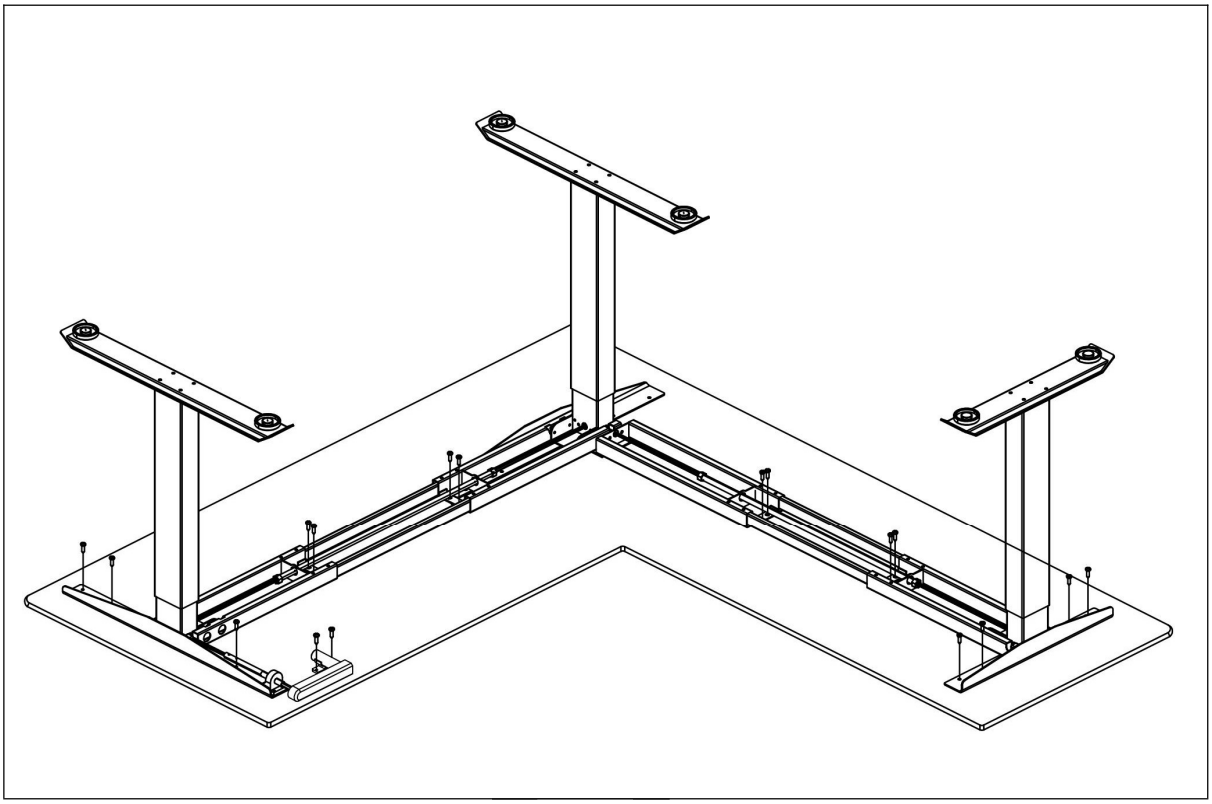

Add-On : Cable tray installation

Step 1

- Fix the cable tray to the cable tray arms with 8 pcs M6x10 screws.

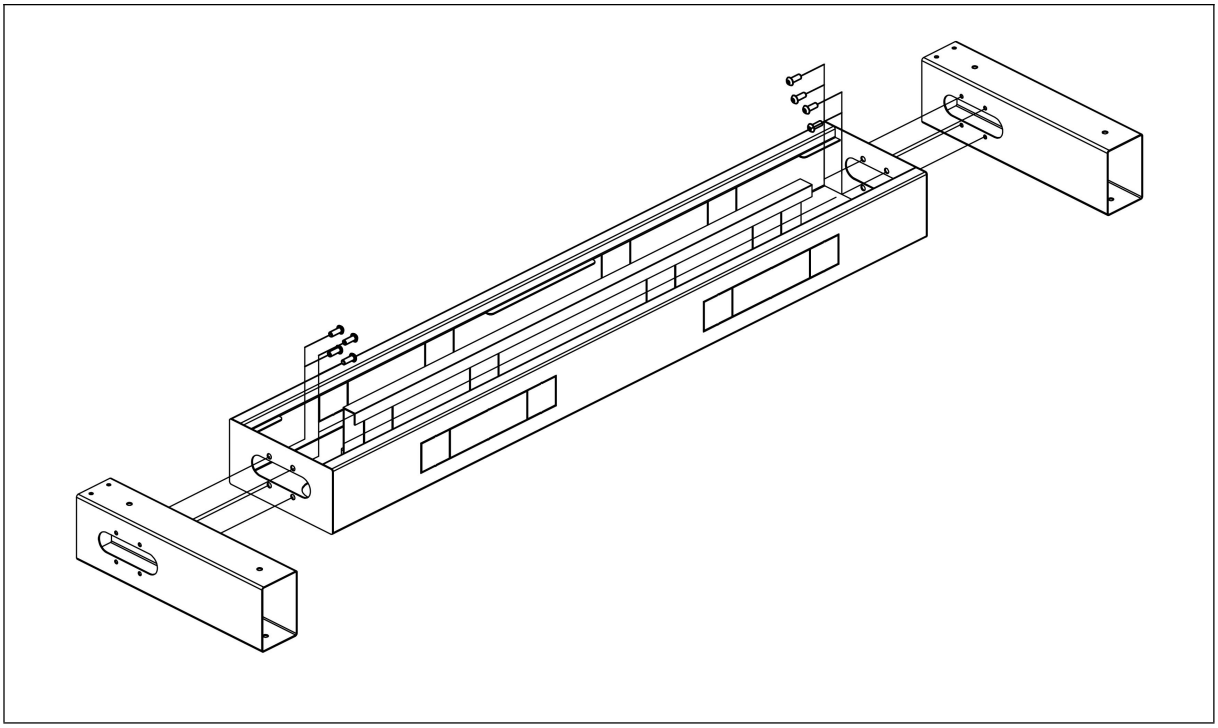

Step 1

- Install the U brackets to the desk frame with 4 pcs M8x10 screws.
- Mount the cable tray to the desk frame and fix it with 6 pcs M6x10 screws

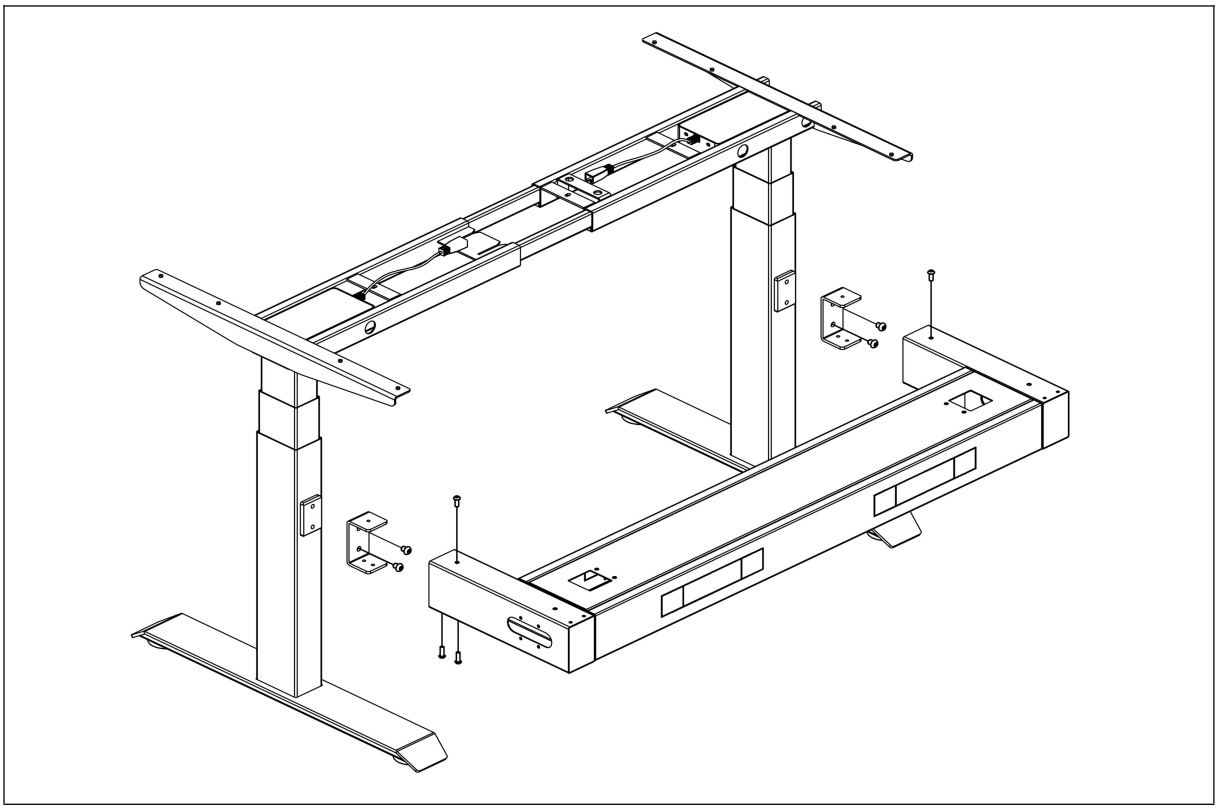

Add On : Screen panel installation

Step 1

- Insert the tapped plates to the screen panel

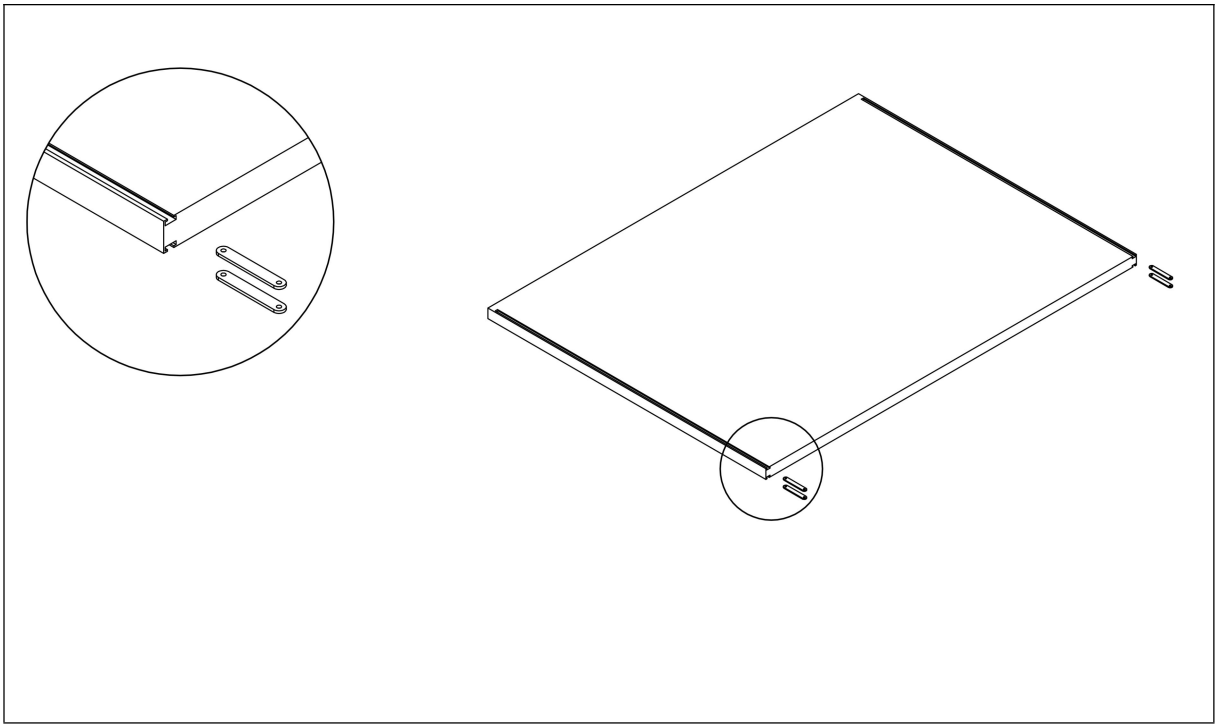

Step 2

- Install the brackets to the panel with 8 pcs M5x6 screws.

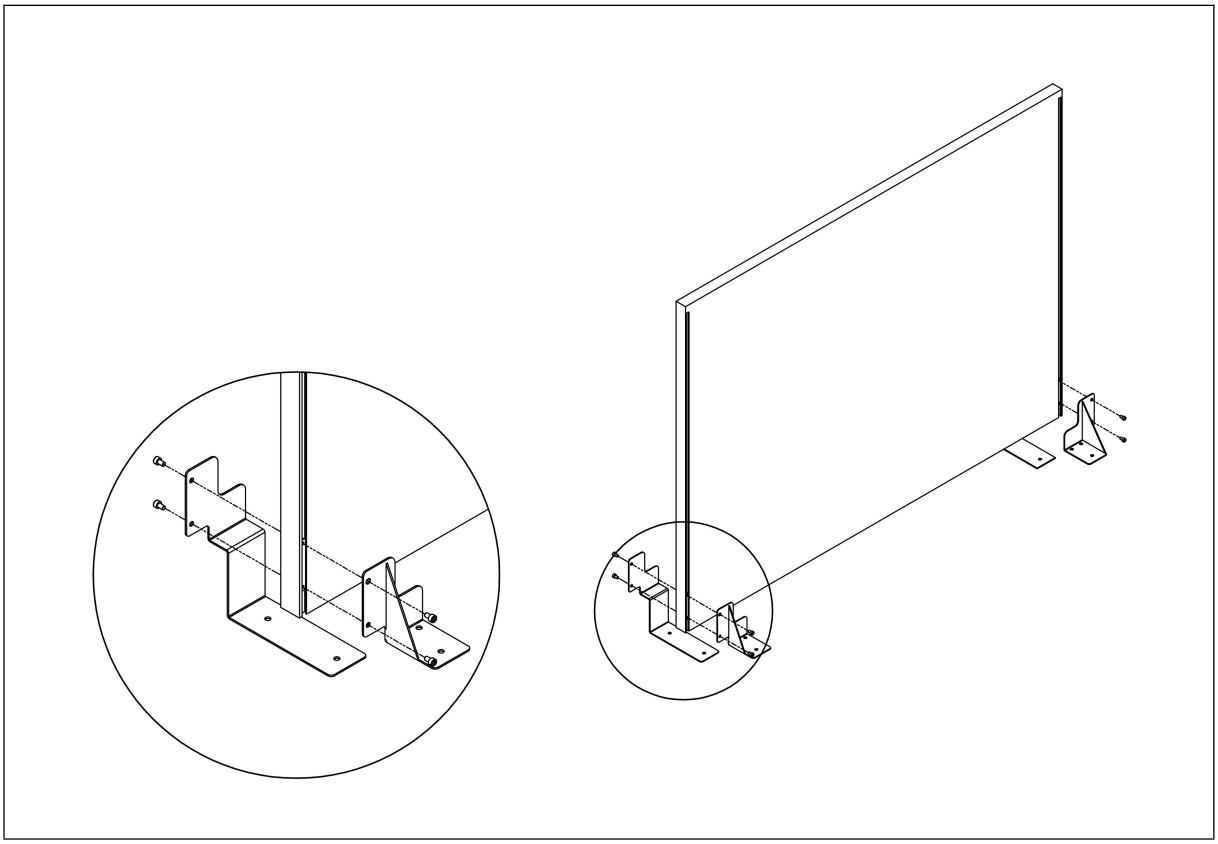

Step 3
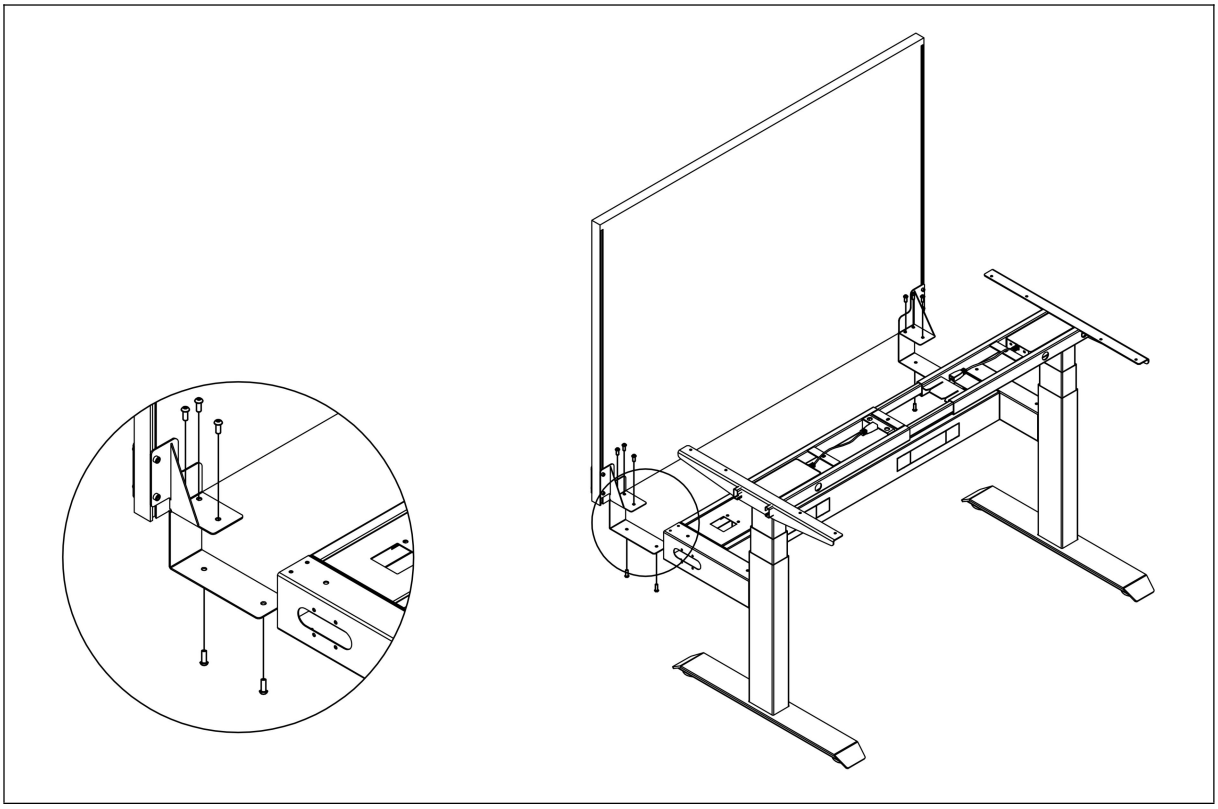
- Fix the panel to the desk frame with 10 pcs M6x10 screws.