EFIFURNITURE

Single Sided Crank Workstation

Instruction Manual

Table of Contents

Component parts 2

Assembly Instructions 3

Important Safety Instructions 9

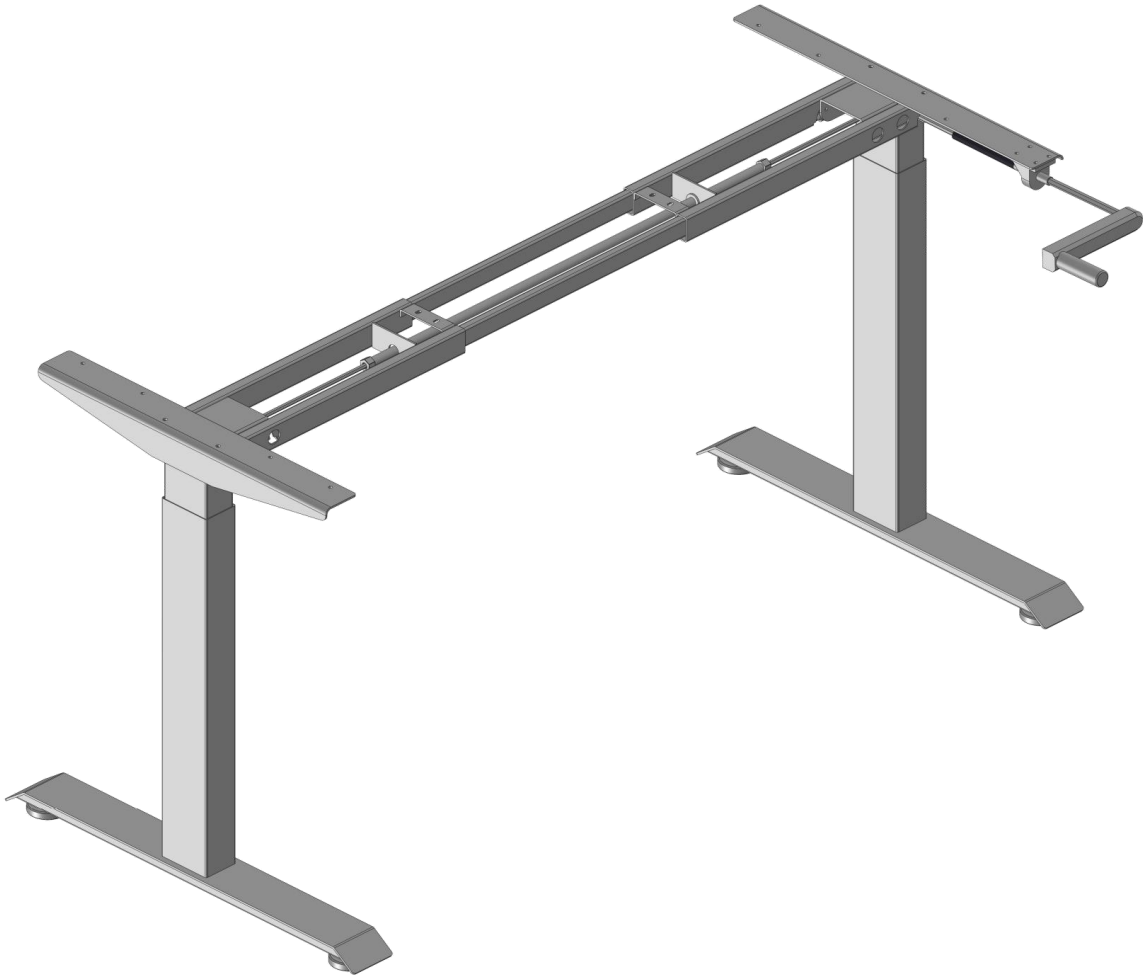

Component parts

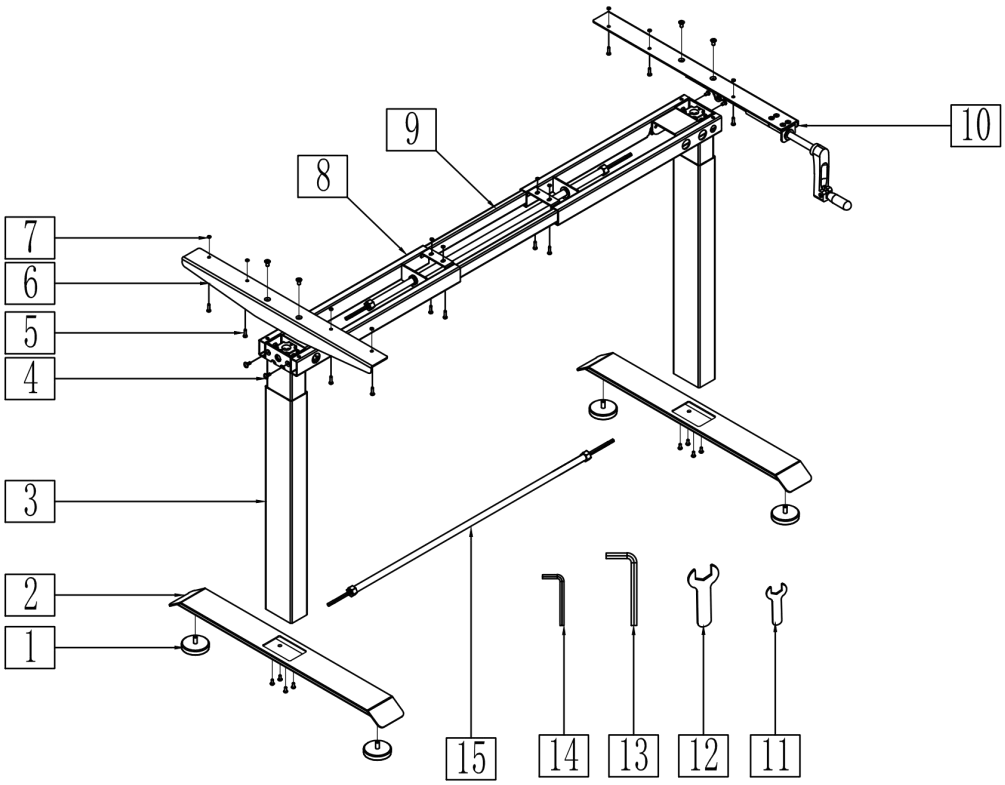

NO.	Component Name	PCS		NO.	Component Name	PCS
1	Leveling pads	4		9	Center rails	2
2	Table feet	2		10	Side brackets-2	1
3	Lifting column	2		11	Open spanner（6mm）	1
4	Bolt: M6x12	8		12	Open spanner（18mm）	1
5	Screw:ST4x16	14		13	Allen Wrench(4mm)	1
6	Side brackets-1	2		14	Allen Wrench(2mm)	1
7	Rubber pad	12		15	Longer aluminum pipe for 1800W tabletop	1
8	Top frame	2		16		

Assembly Instructions

Step 1

Loosen the pre-installed bolts and Adjust the length of the top frame to match the size of the table top.

<u>If the tabletop size 1200W,please use the Shorter aluminium pipe.</u>

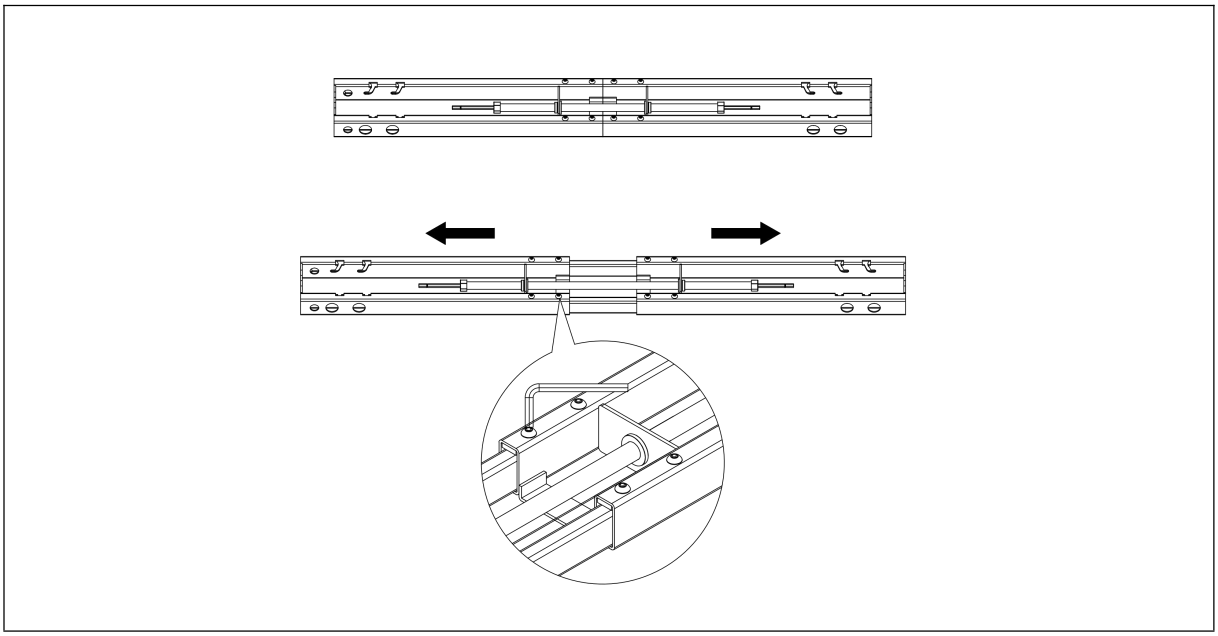

Step 2

Inset the lifting column to the top frame.

- First fix 4 pcs screws M6x12
- And then tighten the pre-installed

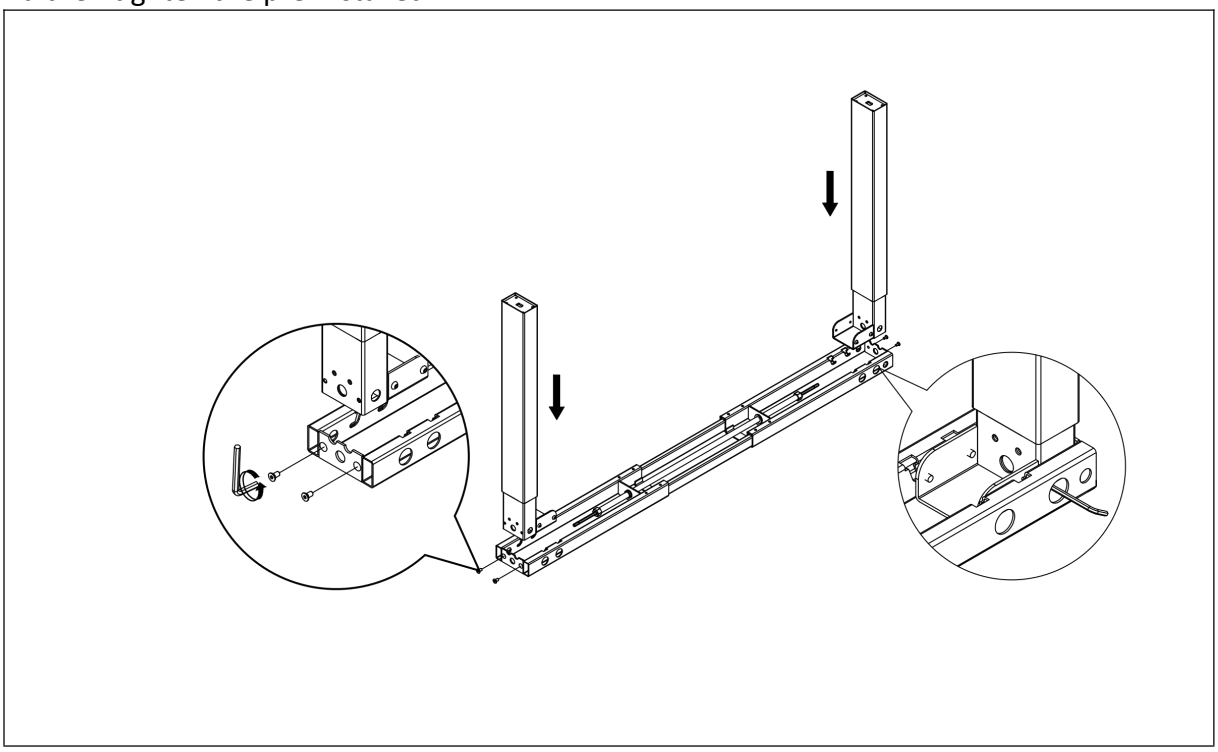

Step 3

Install the two table feet with Screws 8 pcs M6x16,
Install the 4 pcs leveling pads

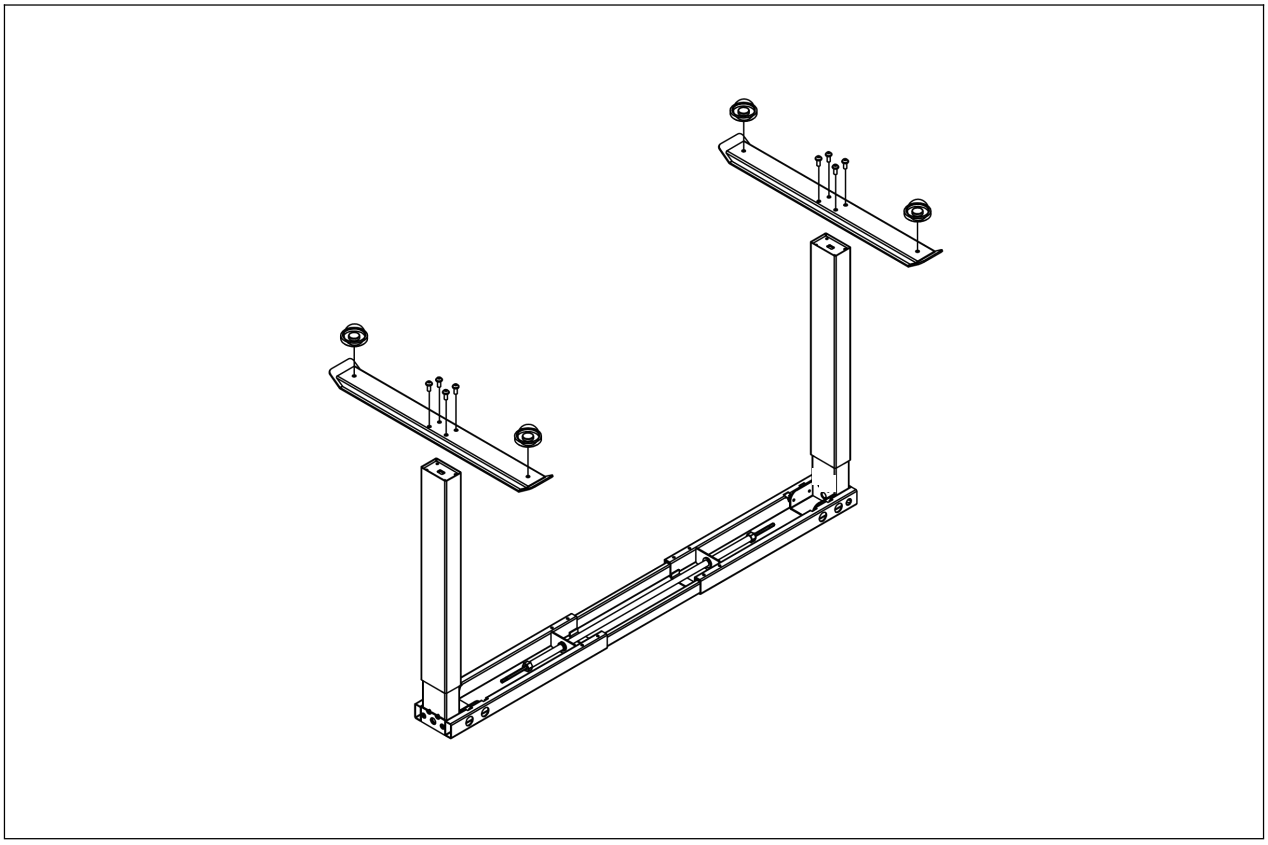

Step 4

Install the two side brackets with Screws 4 pcs M6x12,

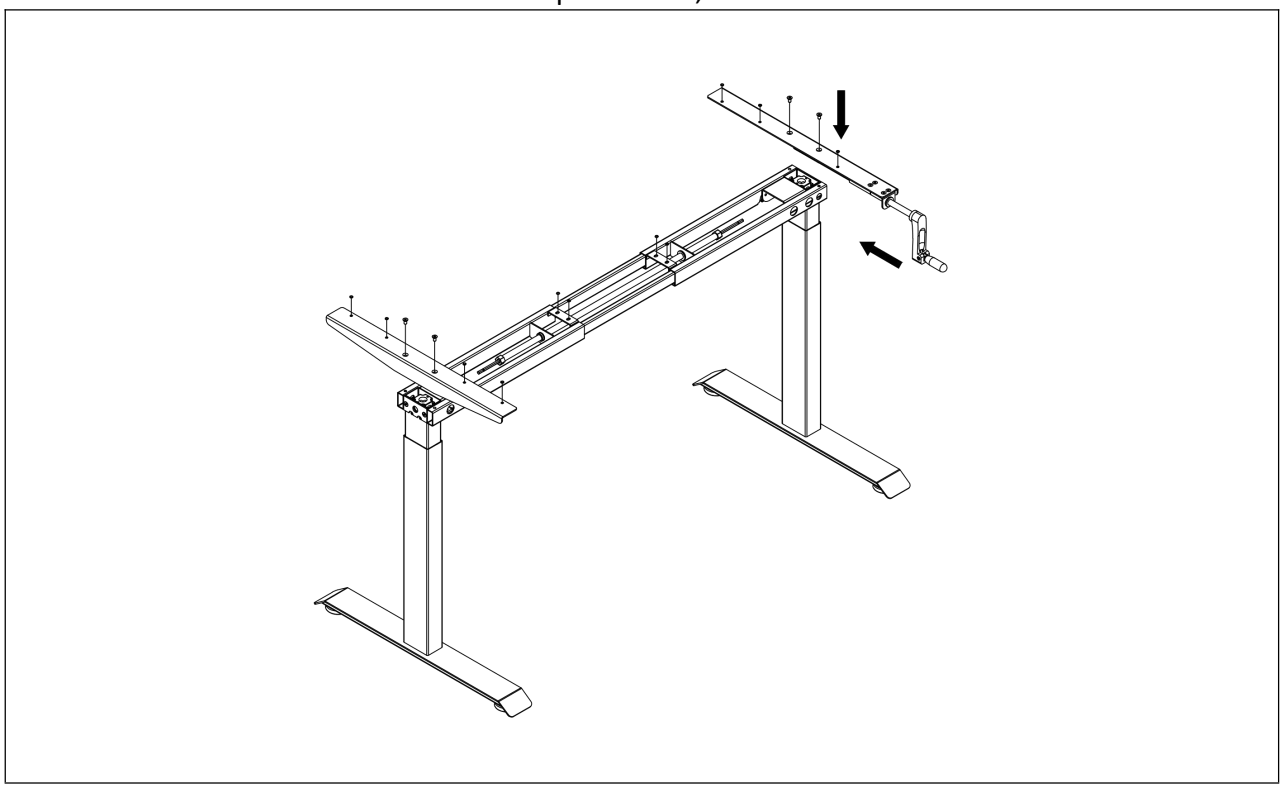

Step 5

Install the desk frame to the tabletop with ST4 * 16 screws, insert the transmission rod into the left and right lifting columns, and tighten with an open-ended wrench.

Fix the handle holder with 2 ST4 * 16 screws to the tabletop

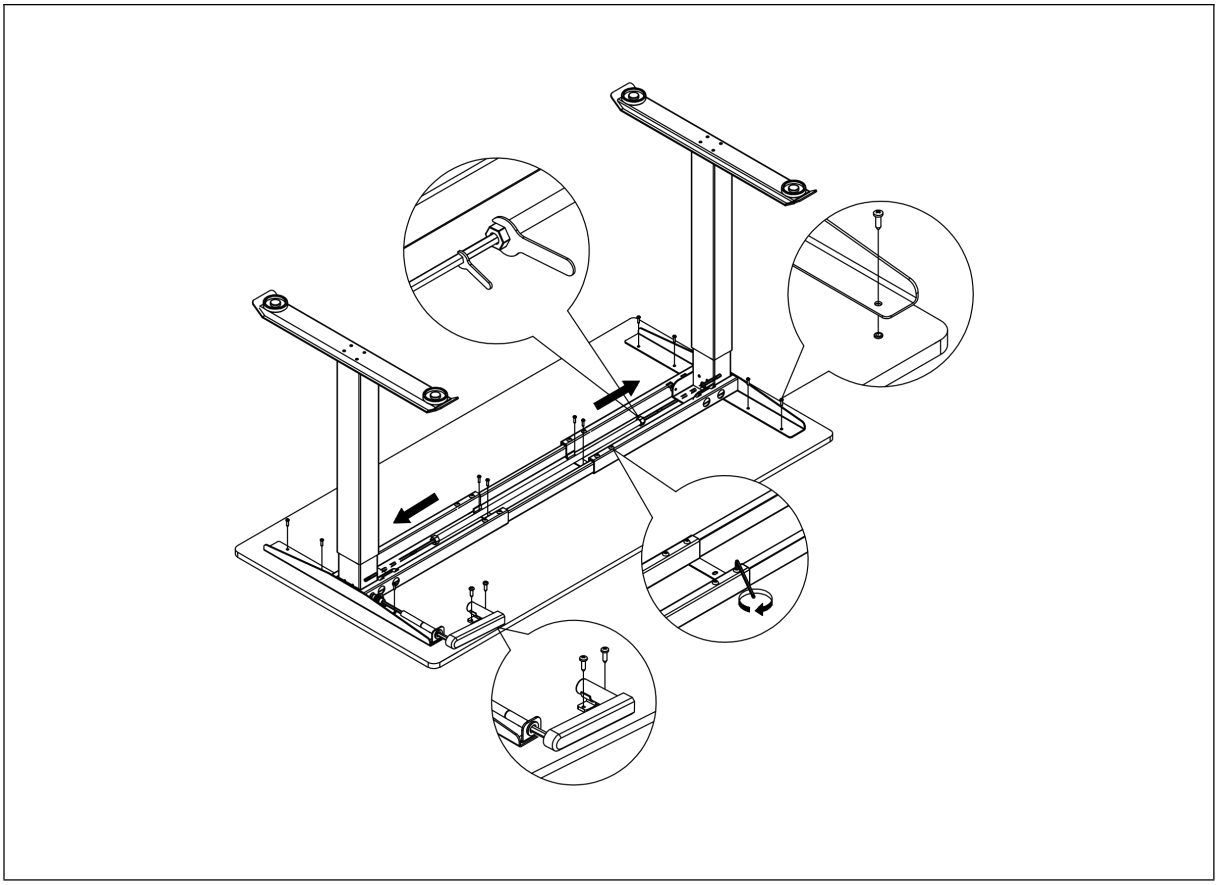

B. Technical Specifications

Load Capacity:	80Kg(Dynamic)
Speed:	5mm/ per cycle
Adjust Height:	450mm
Min. Height :	675mm
Hand Crank Clockwise Rotation：	Up
Hand Crank anticlockwise Rotation：	Down

Add-On: Cable tray installation

Step 1

- Fix the cable tray to the cable tray arms with 8 pcs M6x10 screws.

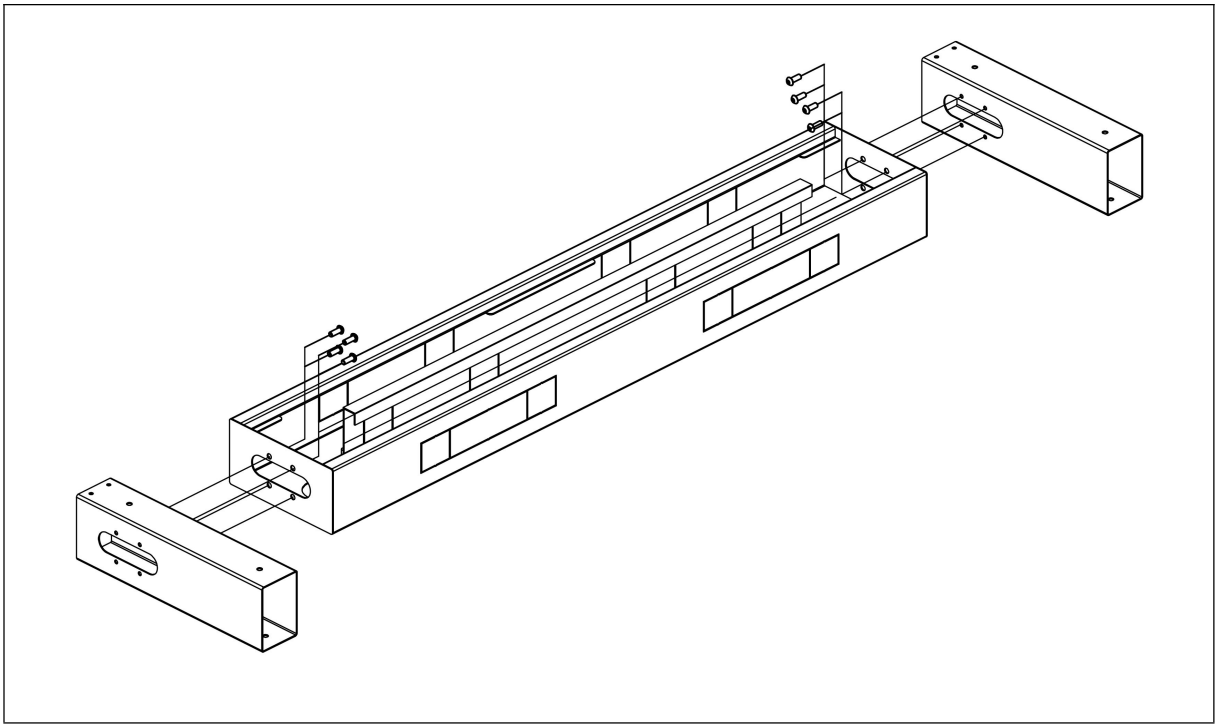

Step 1

- Install the U brackets to the desk frame with 4 pcs M8x10 screws.
- Mount the cable tray to the desk frame and fix it with 6 pcs M6x10 screws

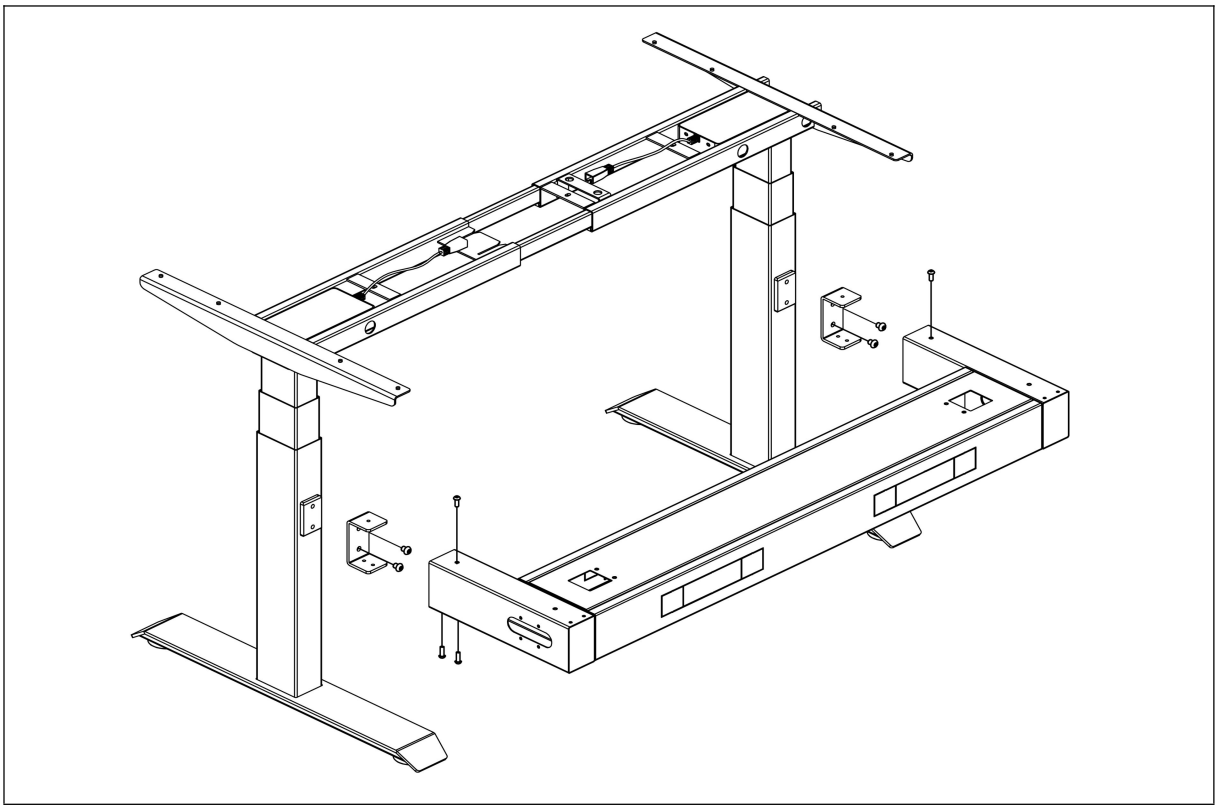

Add on : Screen panel installation

Step 1

- Insert the tapped plates to the screen panel

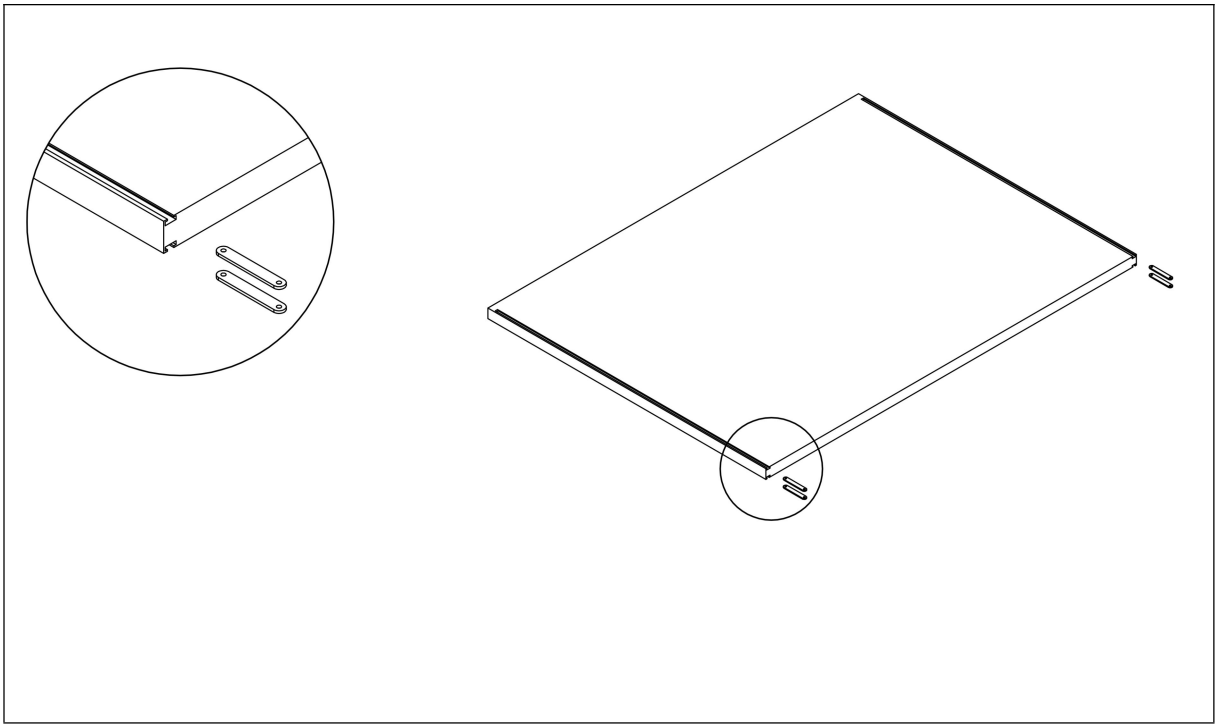

Step 2

- Install the brackets to the panel with 8 pcs M5x6 screws.

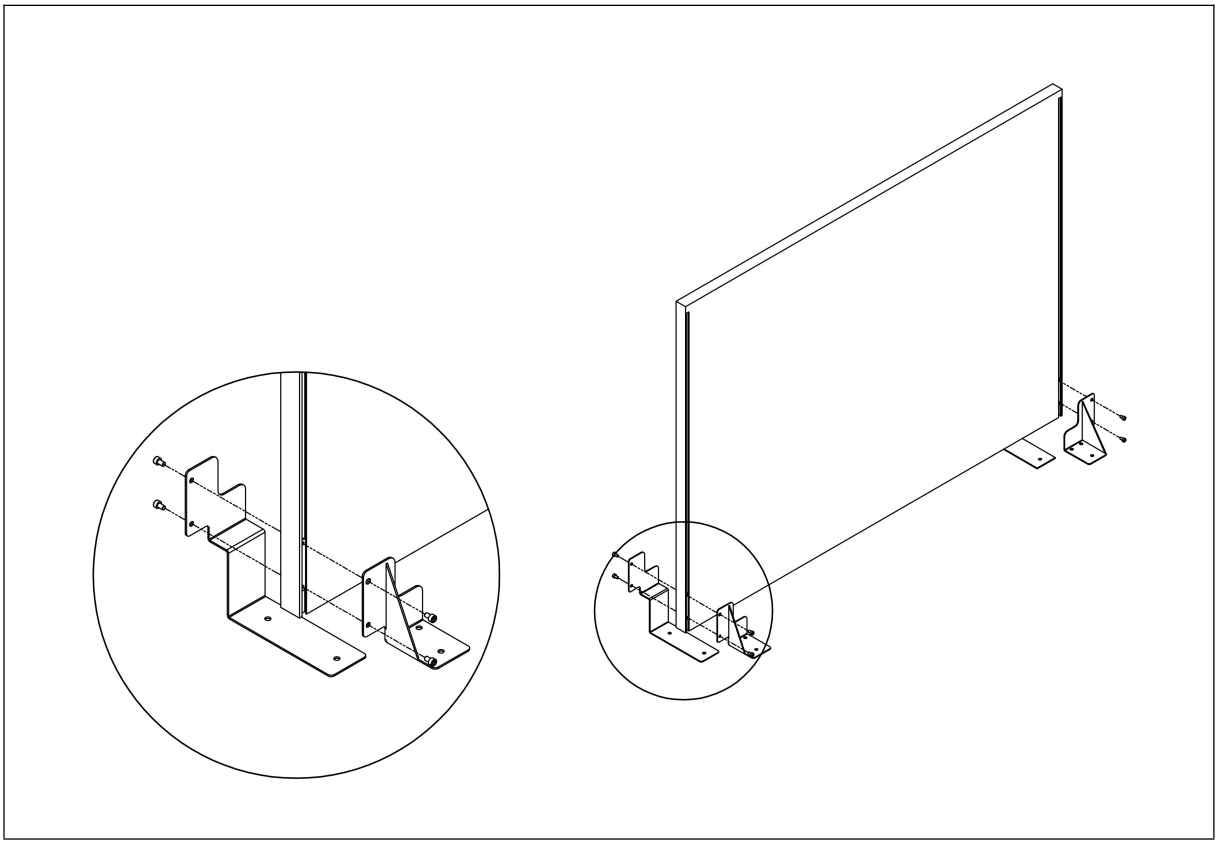

Step 3
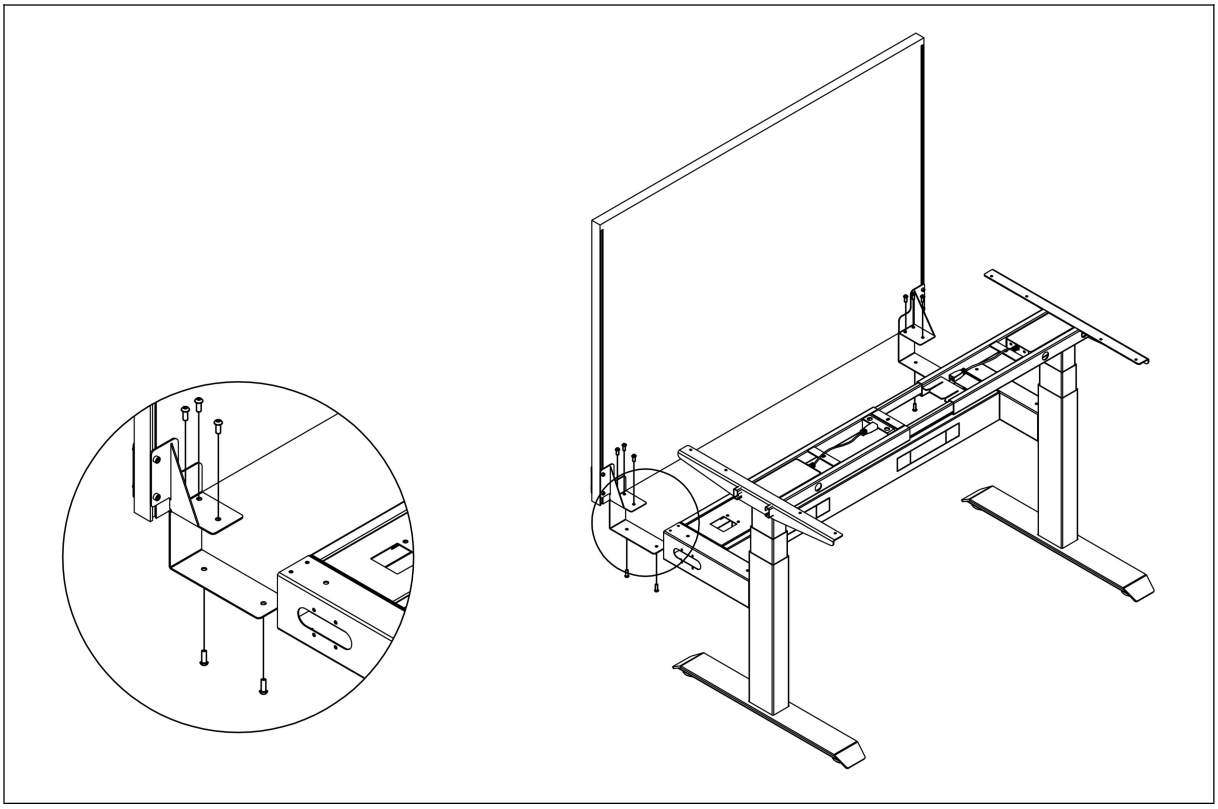
- Fix the panel to the desk frame with 10 pcs M6x10 screws.