Assembly Instructions:

Product Code : B+2P1275 / B+2PCT1275 / B+2PWS1275 / B+2PWSCT1275
B+2P1575 / B+2PCT1575 / B+2PWS1575 / B+2PWSCT1575
B+2P1875 / B+2PCT1875 / B+2PWS1875 / B+2PWSCT1875

Product Name: BOOST+ Back to Back Workstations

Time Required:

45 minutes

Tools Required:

Screwdriver, Electric Drill, Pencil, Measuring tape/Ruler
*Tools are not included.

Skill Required:

Easy ●●●●○ Hard

The Assembly Skill Rating is a 5-point system that shows the degree of effort needed in assembling a specific product. With 1 being easy for the average person and 5 requiring an expert.
For most products, two persons are recommended.

Please note, as this is a commercial product, some intermediate skills are required.
*No pre-drill holes or markings are provided on tops.

• As th s may be required.
• Nc ble or desk tops.
embling.
• If you are missing any harc e ensure you have the name of the item,

EFI Furniture
32 Lisa Place, Coolaroo VIC 3048
03 9302 3067
efifurniture.com.au
contact@efifurniture.com

• Please retain your receipt as proof of purchase to validate your warranty.
• Assemble on a clean, flat, smooth surface such as a rug or carpet to avoid parts from being scratched.
• Remove all wrapping materials, including staples and packing straps before you start to assemble
• Keep all hardware parts out of reach of children.

CAUTION

• Heavy product. Do not attempt to lift or move without help
• Do not tighten screws and bolts until completely assembled.
• Do not use this product unless all bolts and screws are firmly secured and tightened.

WARNING

• If parts are missing, broken, damaged or worn stop using the product until all repairs are made.
• Failure to follow these warnings could result in serious injury.

Back to back desk frame

Instruction Manual

Table of Contents

Component parts 2

Assembly Instructions 3

Use Instructions 10

Troubleshooting 12

Important Safety Instructions 13

Advanced Programming 14

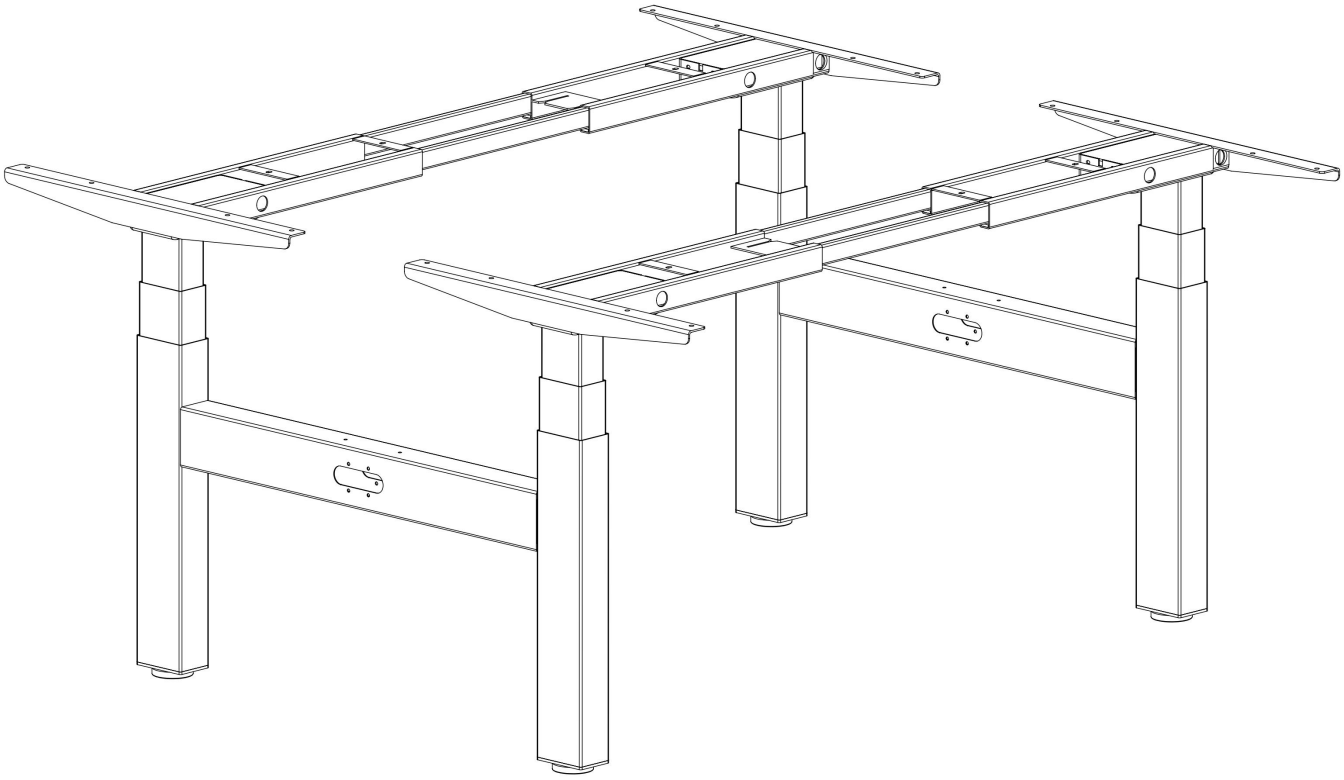

Component parts

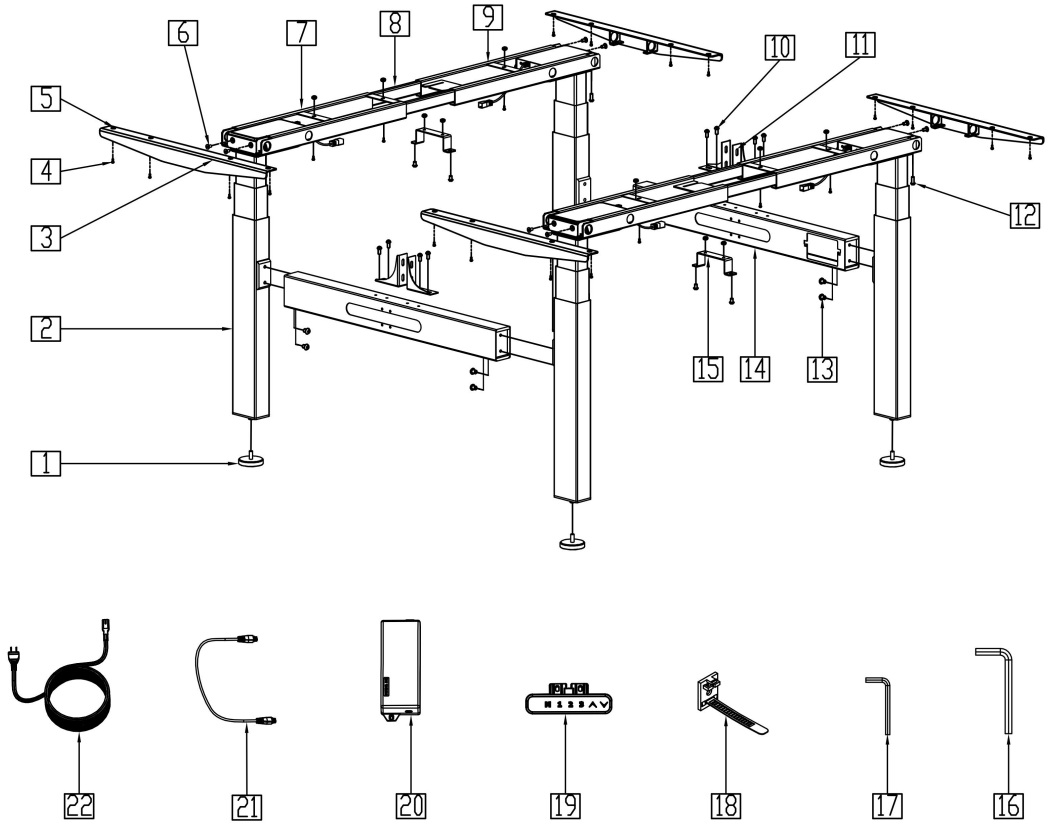

NO.	Component Name	PCS		NO.	Component Name	PCS
1	Leveling pad	4		12	Bolts M6x16	10
2	Lifting Column	4		13	Bolts M8x10	9
3	Side Bracket	4		14	Connected beam	2
4	ST4x20	40		15	Centre bracket	2
5	Rubber pad	24		16	Allen Wrench(5mm)	1
6	Bolts M6x12	10		17	Allen Wrench(4mm)	1
7	Top frame -1	2		18	Cable Tie	10
8	Centre rails	4		19	Handset	2
9	Top frame-2	2		20	Control Box	2
10	Bolts M6x10	14		21	Motor cable	4
11	Screen brackets	4		22	Power cord	2

Assembly Instructions

Step 1

Loosen the pre-installed bolts and Adjust the length of the top frame to match the size of the table top.

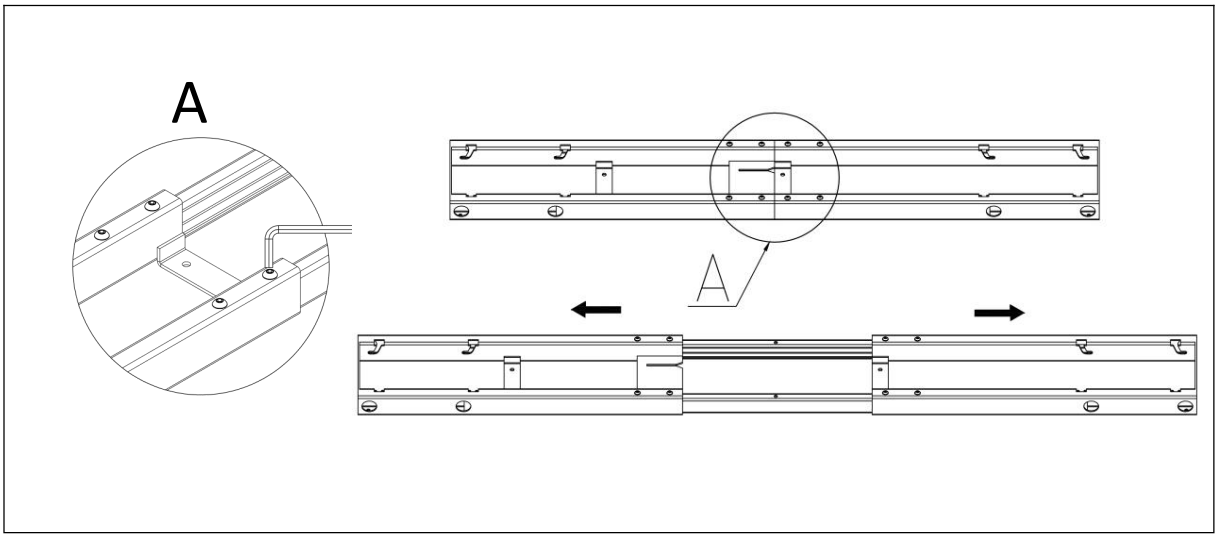

Step 2

Inset the lifting column to the top frame.

- First fix 2pcs screws M6x12 like **B** displayed
- And then tighten the pre-installed bolts like **C** displayed

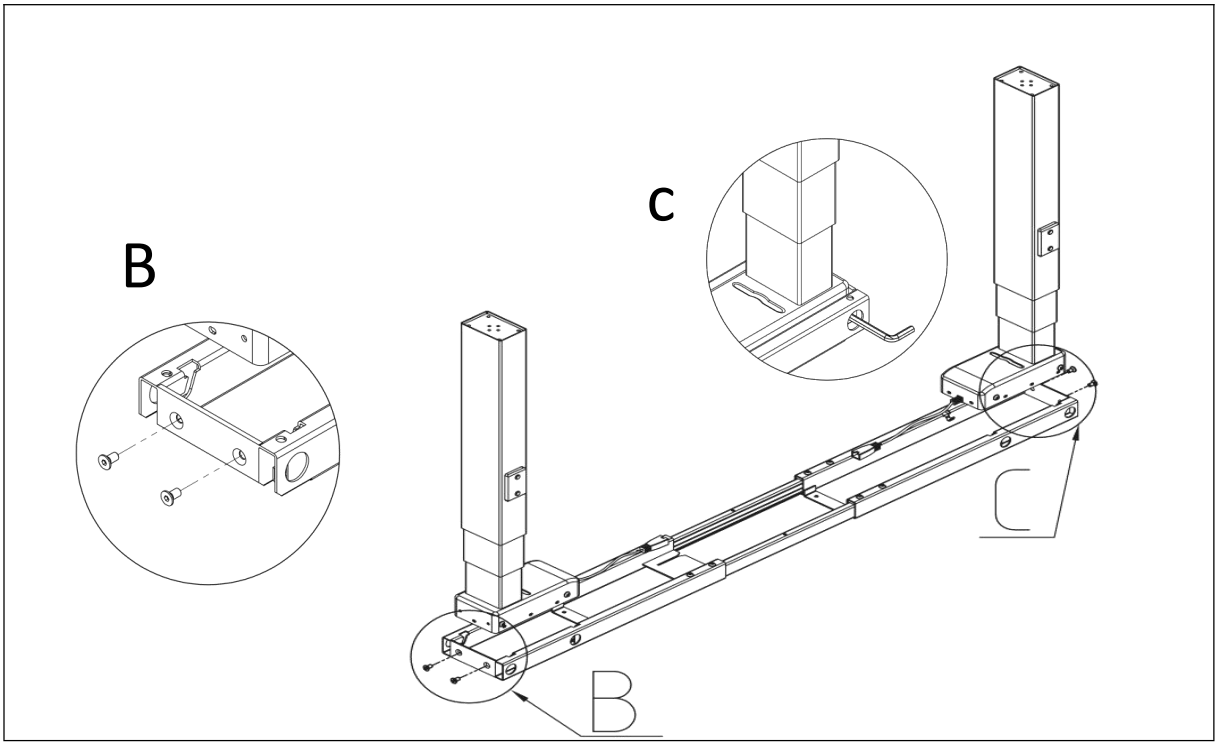

Step 3

Install the side brackets with Screws 8 pcs M6x16,

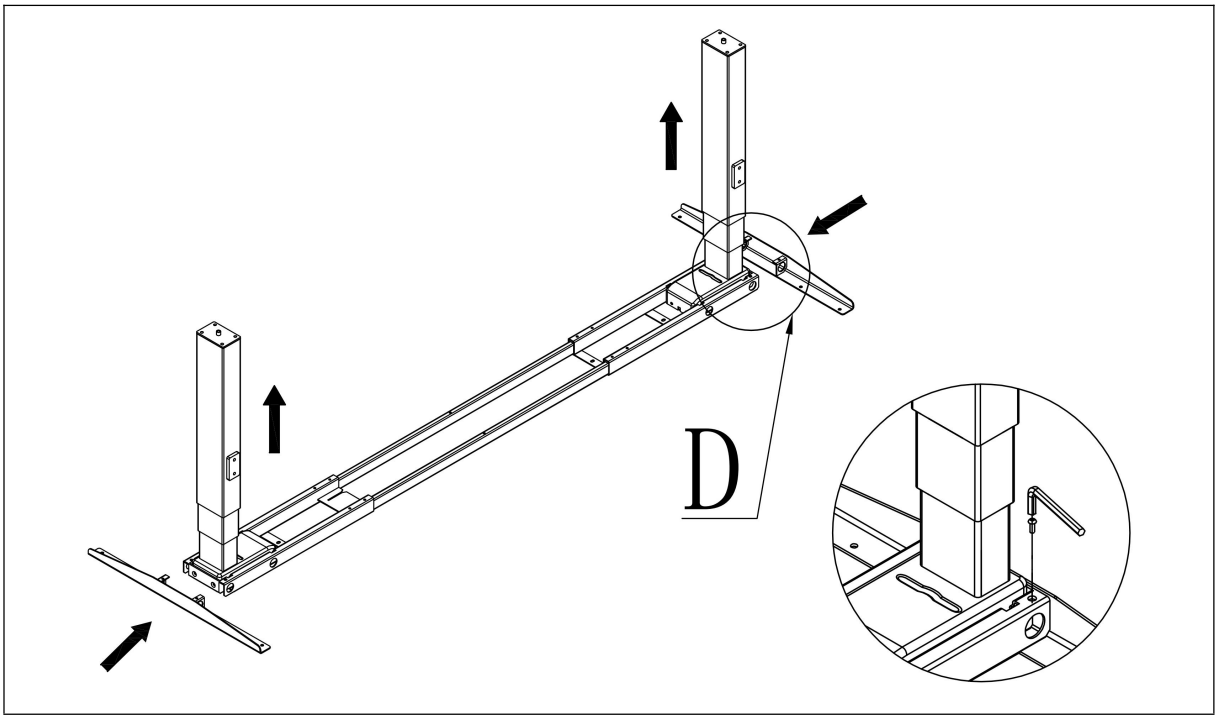

Step 4

Install the leveling pads

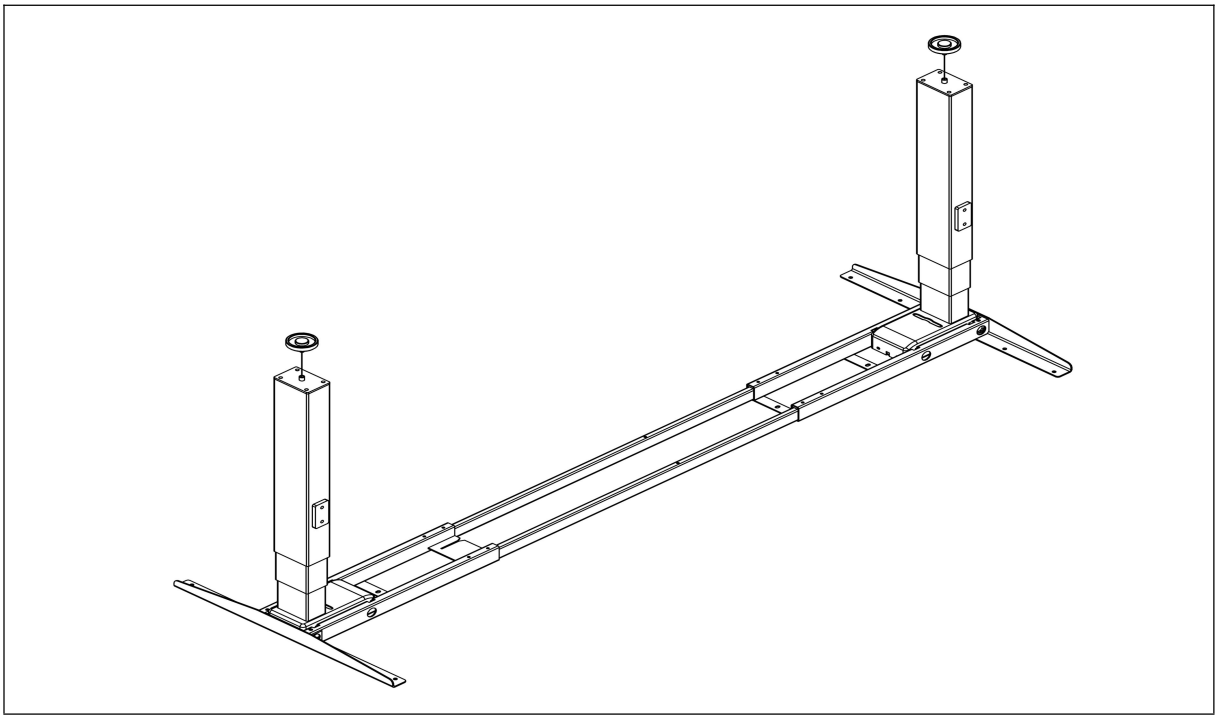

Step 5

Install the connected pipe with 8 pcs screws M8x10

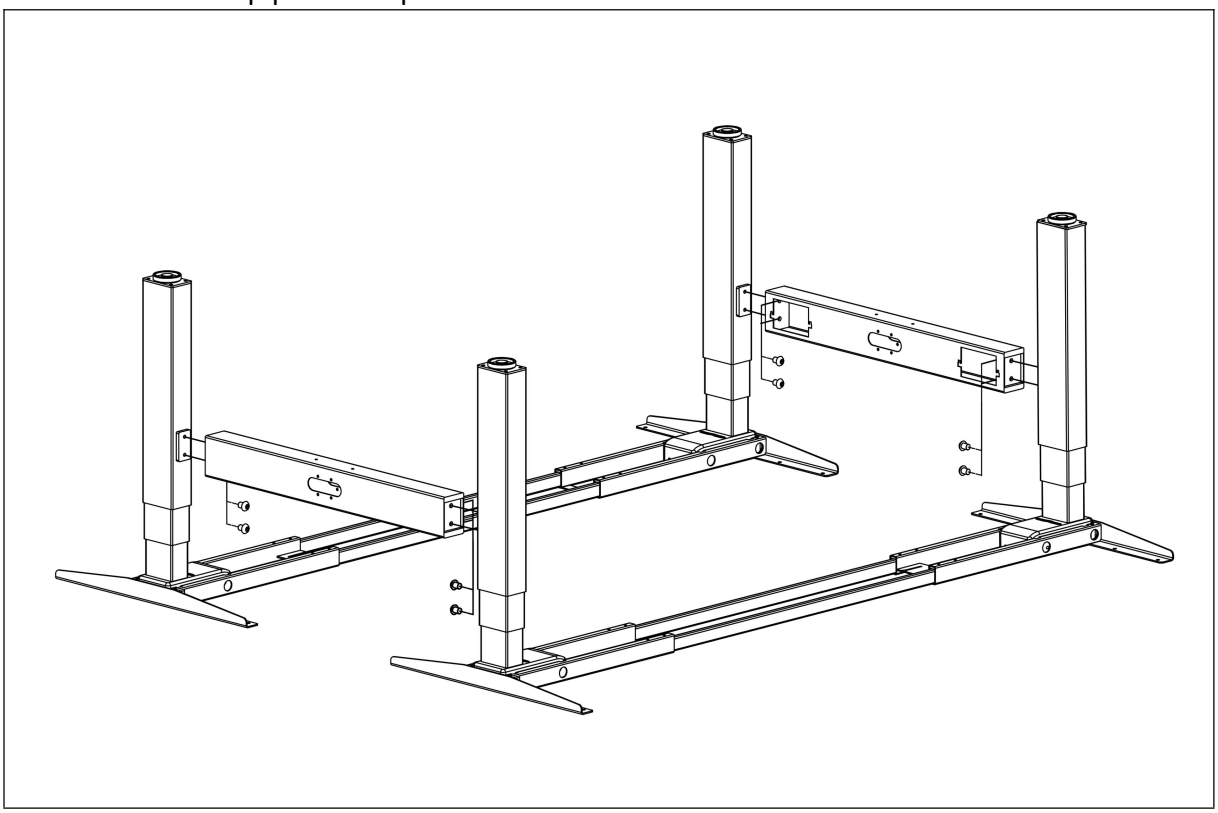

Step 6

Fix the screen brackets with 8 pcs screws M6x10.

If you have a cable tray,please refer to the page 7 for a cable tray installation before you do the following assembly.

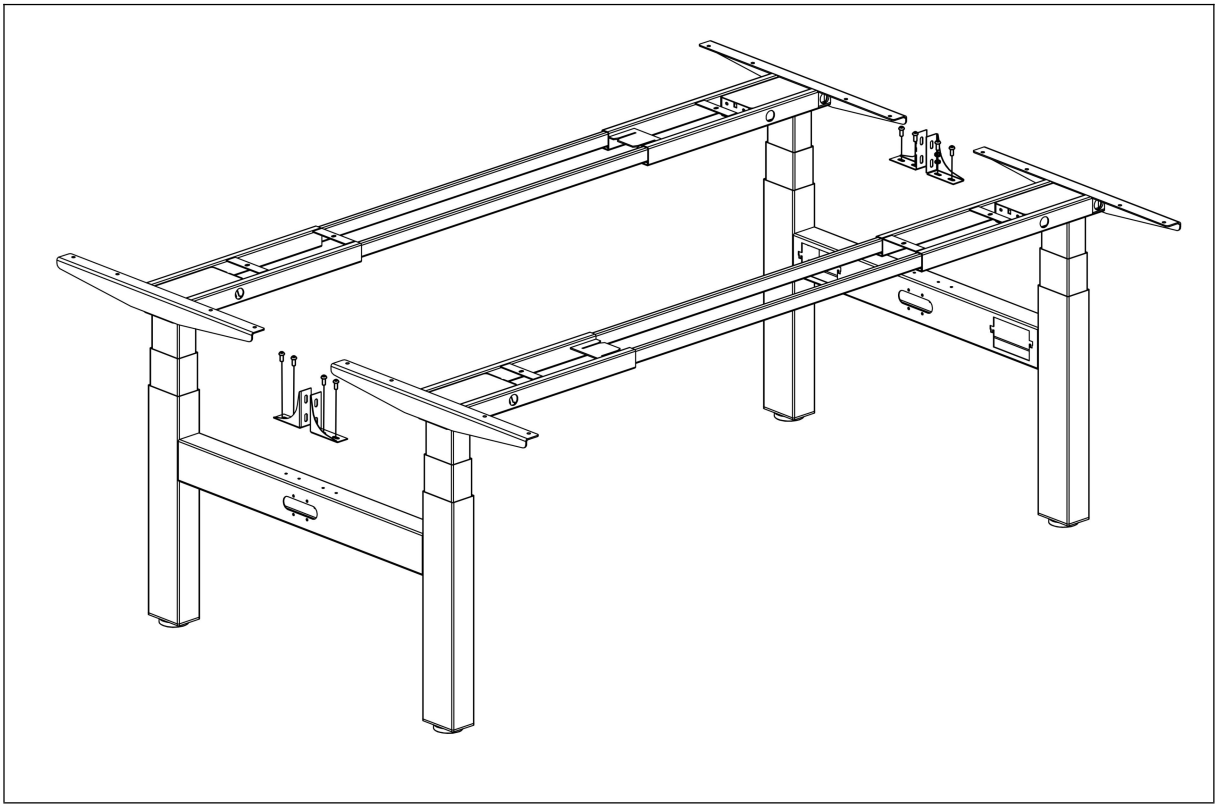

Step 7

Fix the table top with 21 pcs screws ST4x20 ,Fix the handset with 2 pcs screws with ST4x20
Install the centre bracket with 2 pcs screws M6x10

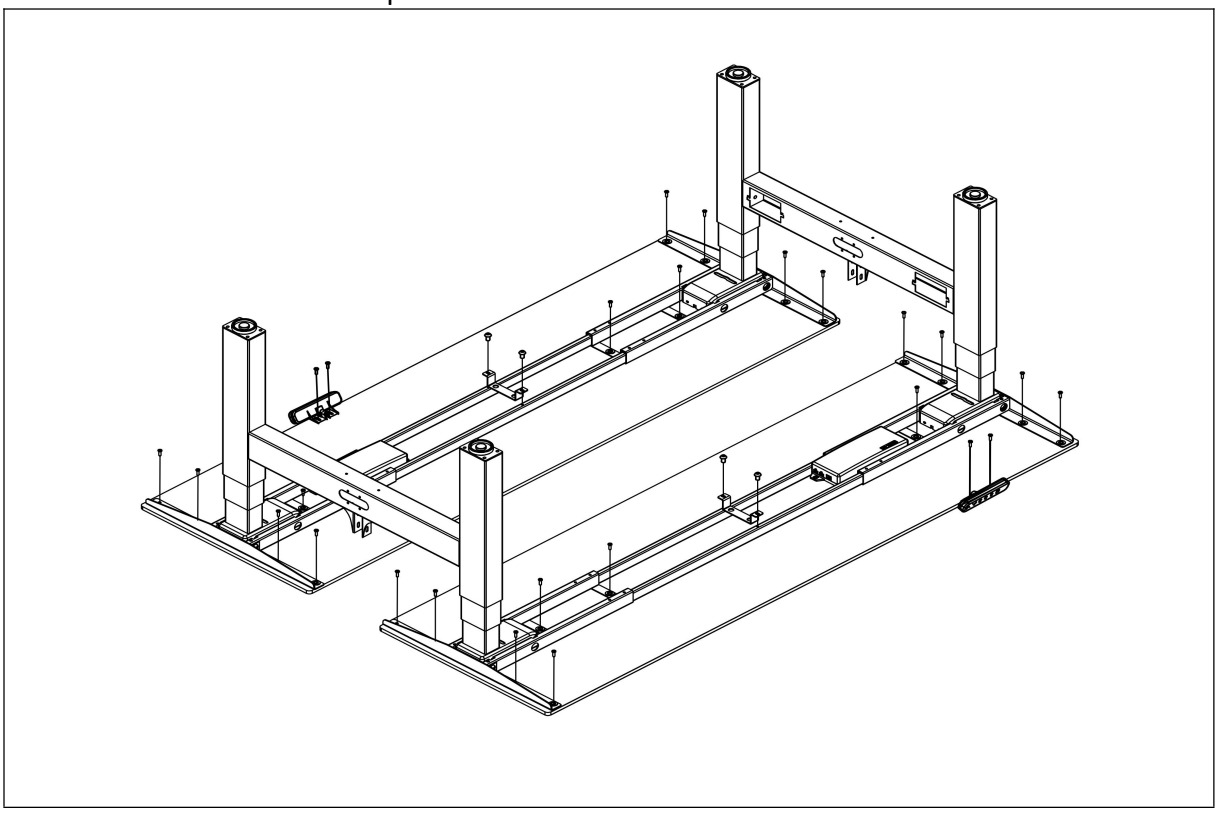

Step 8

Mount the control box to the frame,connected the cables well.
Zipped the cables with cable tie.

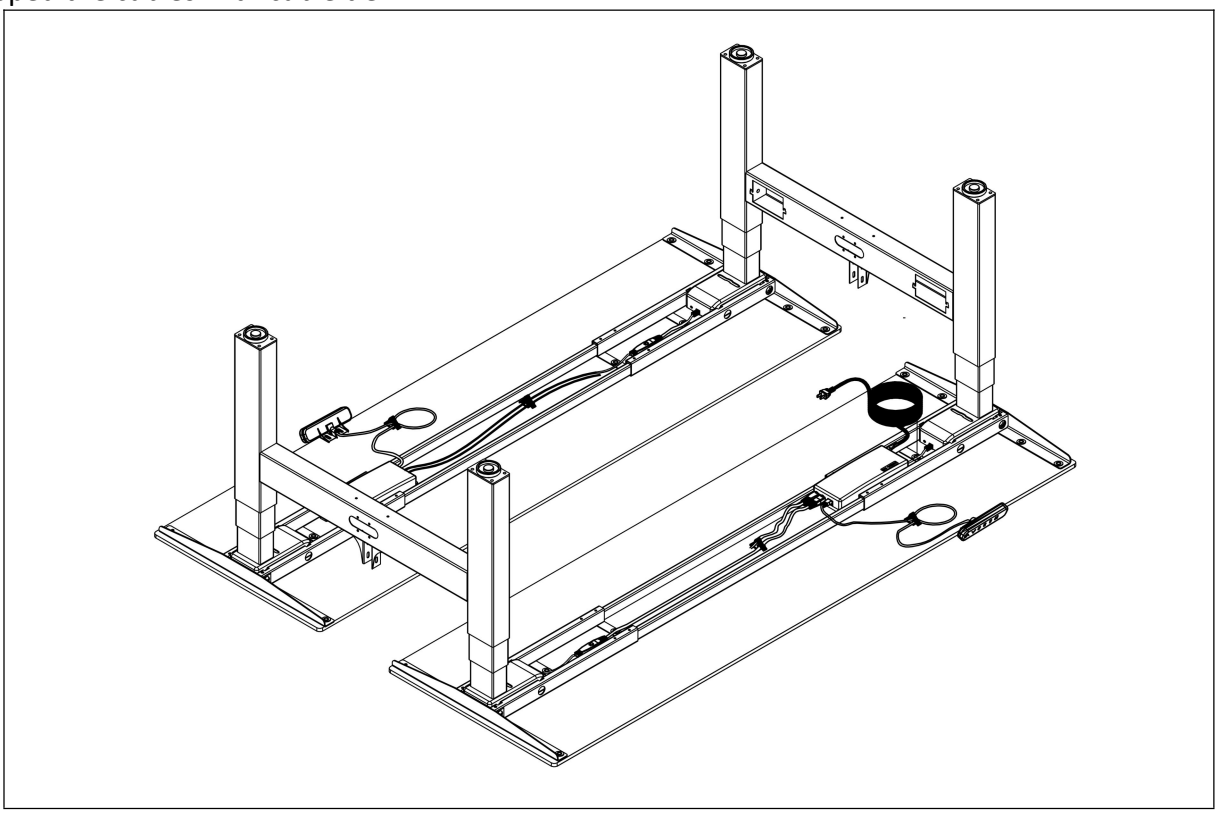

Cable tray installation

- Fix the cable tray with 8 pcs M6x10 screws to the desk frame.

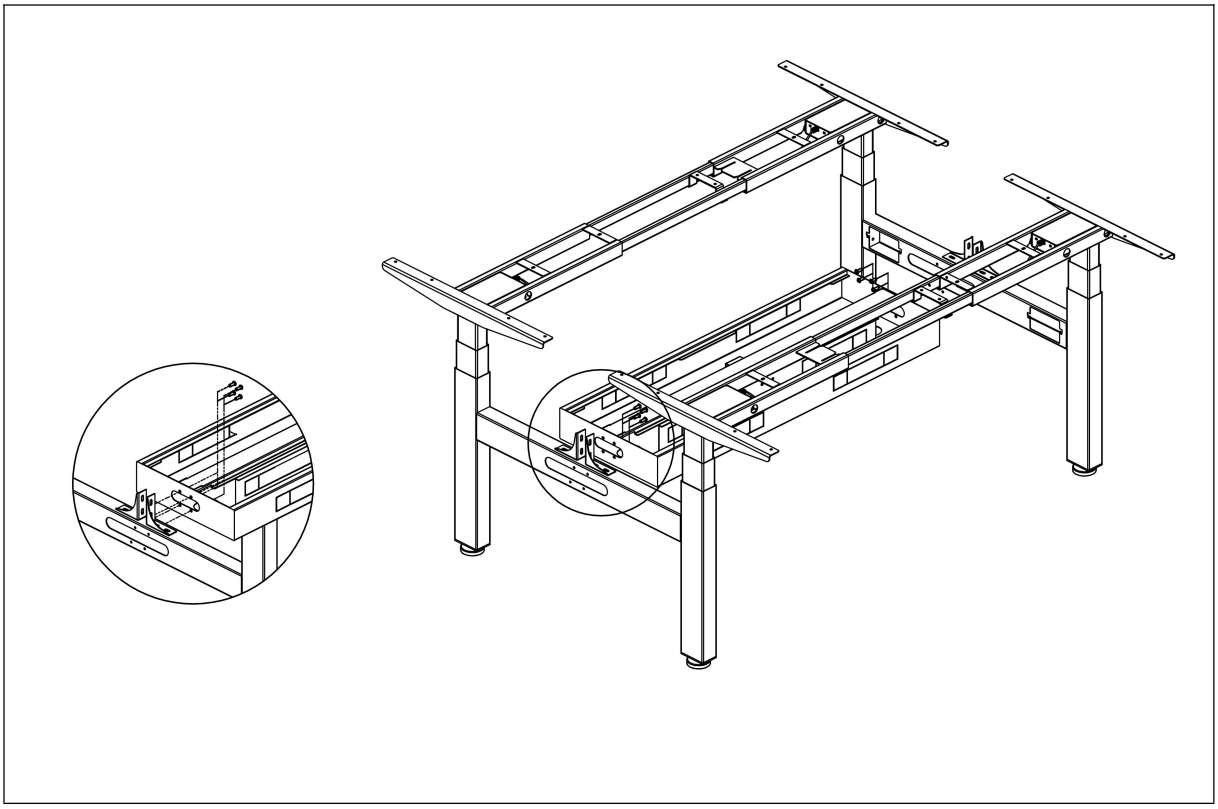

Screen panel installation

Step 1

- Insert the tapped plates to the screen panel

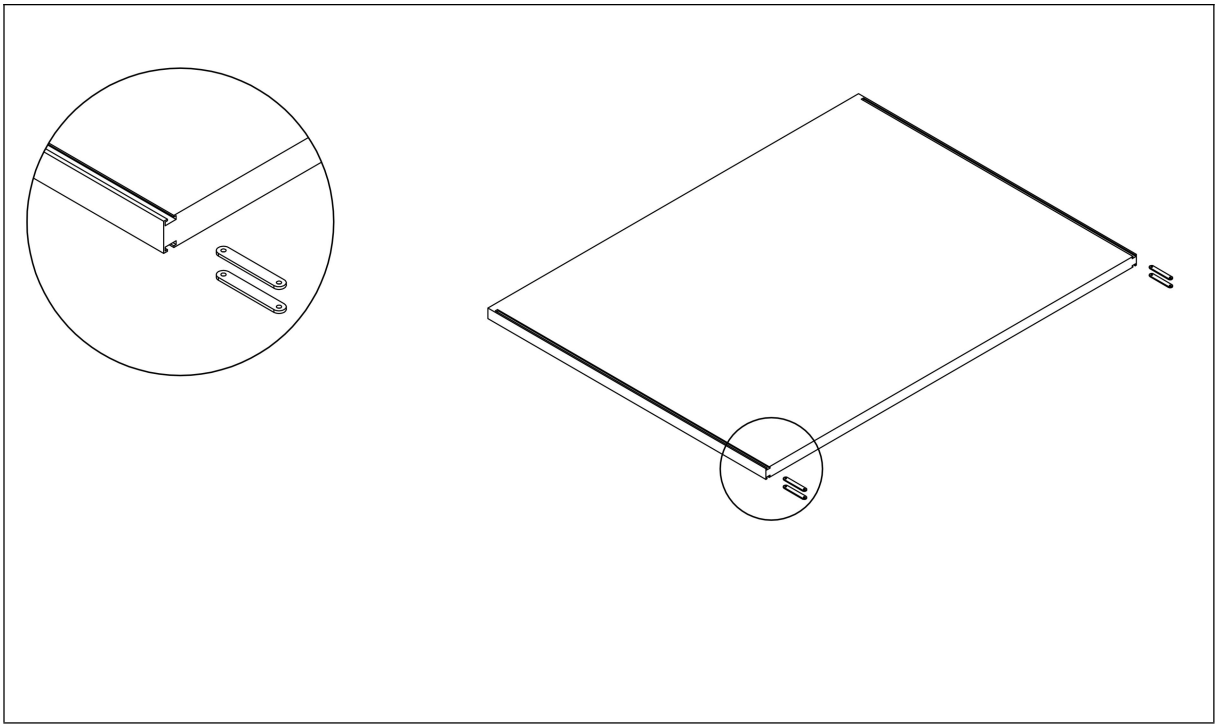

Step 2

- Install the brackets to the panel with 8 pcs M5x6 screws.

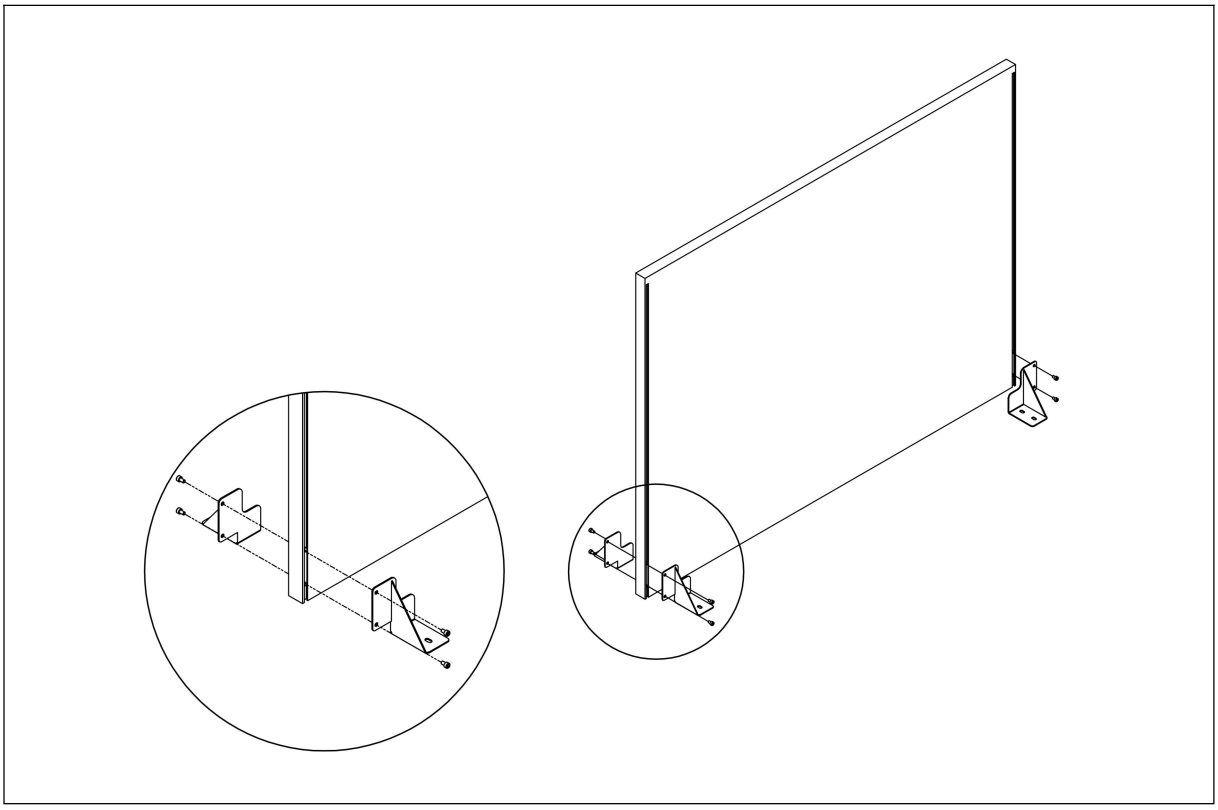

Step 3

- Fix the panel to the desk frame with 8 pcs M6x10 screws.

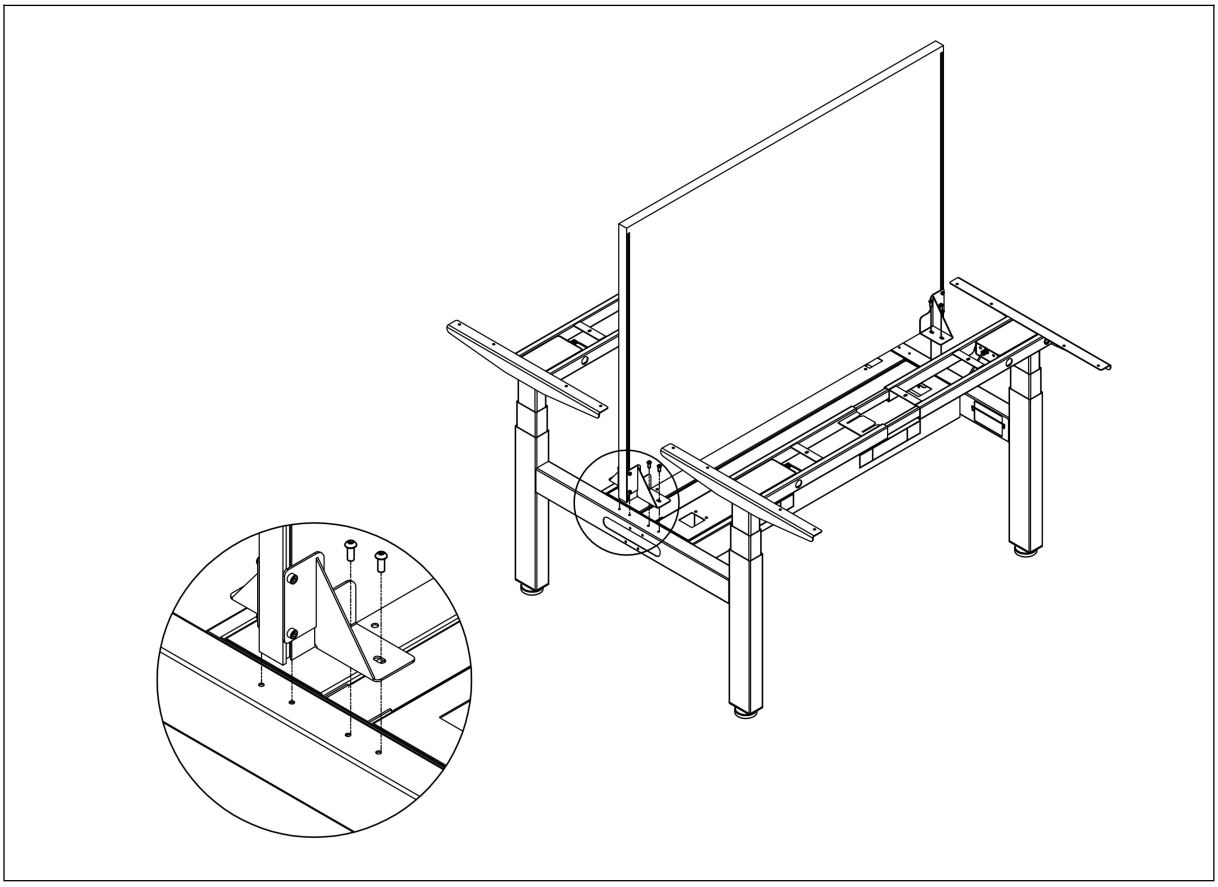

Use Instructions

A. Parts list

1. Lifting Column ..... 2 pcs

2.Handset..... 1 pcs

3. Control Box ..... 1 pcs

4. Motor Cable ..... 2 pcs

5. Power Cord ..... 1 pcs

Connect the cables as shown in the photo below:

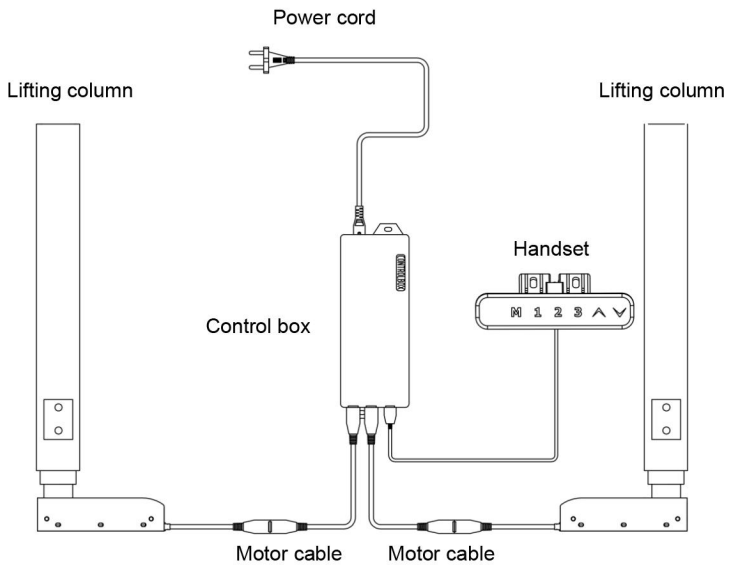

B. Technical Specifications

Input: 100-240VAC

Output Power: 29VDC

Maximum accepted weight: 120 kg (including tabletop weight)

Maximum speed: 38 mm/s

Minimum height: 620mm

Travel distance: 650 mm

Operating temperature: 0-40°C

Duty Cycle: Max.10% or 2 min on and 18 min pause

Control Panel Operation and Programming Instructions

1. Make sure all components are connected correctly (control box, control panel, power cable and connecting cable, lifting columns).

2. Connect the power cable to a 110/240VAC outlet. After the control panel will display "62.0" sign for a few seconds, the system is turn on and the desk is ready for use.

3. Up and Down
Press and hold the "**UP**" button to move up the desk to the desired height. The desk will stop when the button is released.
Press and hold the "**DOWN**" button to lower the desk to the desired height. The desk will stop when the button is released.

4. Memory Settings
After adjusting the desk height using the "**UP**"/"**DOWN**" buttons, press the **"M"** button and "**S -**" sign will be displayed on the control panel. Then press the desired button from 1 to 4 to assign the current height to a number on the keypad. Can be saved and memorized 3 different heights.
Moving the desk to a preset height can be done by pressing the corresponding button from 1 to 3.
During operation you can stop the desk by pressing one of the "**UP**"/"**DOWN**" buttons.

5. Keypad Lock
To lock: Press and hold "**UP**" and "**DOWN**" buttons for 5 seconds until "**LOC**" sign appears on the display, indicating that the system is locked.
To unlock: Press the "**UP**" and "**DOWN**" buttons for 5 seconds at a same time until the "**LOC**" sign disappears and the height of the desk is displayed, indicating that the system is ready to be adjusted again.

6. Reset
When the system is experiencing a problem or the control panel displays "**RES**", the system must be reset. Press and hold the "**DOWN**" button throughout the process. After 5 seconds, the desk will lower slightly until it reaches its lowest height, then rises slightly and the display changes back to the numeric height setting.After the desk stops, the reset process is successfully completed.

Troubleshooting

1. HOT
Issue: Operation of the control box, continuously, for more than 2 minutes.
Solution:
a. Wait 18 minutes.
b. Disconnect the power cable, wait a few minutes, and then plug the cable to the power source. The error code will disappear.

2. E01 and E02
Issue:
a. One of the control box cables is not connected properly, it is defective or broken;
b. The weight on one side of the desk exceeds 120 kg.
Solution:
Make sure all the connection cables are properly connected.
Then wait 3 seconds and the error code will disappear. If the problem still persists, replace the engine with a new one.
Remove load from desk, then the error code will automatically disappear.

3. E06
Issue: The difference between the two lifting columns is higher than 1 cm (0.4 inches).
Solution: Start the "Reset" process.

4. E07
Issue: The load weight exceeds the limit of 120 kg.
Solution: Remove some from the things on the desk to make sure the total weight does not exceed 120 kg.

5. E08
Issue: The input voltage is lower than the required value.
Solution: The error code will automatically disappear when the voltage increases and reaches the limits required by the device.

6. E09
Issue: The input voltage is too high and exceeds the maximum allowed value.
Solution: The error code will disappear automatically when the voltage decreases and reaches the maximum value that the device can support.

7. E10
Issue: The control panel is not connected or does not receive power, while the control box is already connected to a power source.
Solution: Wait 1 second, the error code will disappear automatically. If the problem persists, check the connection cables.

Important Safety Instructions

• Before using this device, read these operating instructions carefully and keep this user manual for future reference.

• Before using the product, check the desk and power cables for any visible signs of damage. If you notice cuts or deep scratches, do not turn on the device.

• Before connecting the product to the power supply, make sure that the power supply voltage is compatible with the parameters of the product.

• Before using it, make sure that the length of the power cable allows you to connect the desk to the power supply.

• The height-adjustable desk contains electronic circuits and should only be used in dry environments. Do not use outdoors or in very dusty environments. Keep away from heat sources and any corrosive materials.

• Keep all electrical components away from liquids. Never touch or handle the desk, power supply, the control box, the panel control or any other cable with wet hands.

• Clean the product only with a clean, dry, soft cloth or cloth. Disconnect from the power supply before moving or cleaning electrical components.

• Do not disassemble the columns, control box and control panel. These actions are considered damage caused by the user.

• This product contains small parts. Make sure they are out of the reach of children. Do not allow children to play with the device. Packing materials must not be used as toys.

• Do not lay or sit on the worktop. This product is not for lifting people.

• Do not exceed the maximum permissible load weight.

• This product can be used in a 10% cycle (2 minutes of operation, followed by 18 minutes pause).

• The manufacturer cannot be held liable or responsabile for any damage or injuries resulting from improper use of the vacuum cleaner, in other words, non-compliance with these safety instructions and warnings.

Advanced programming

1Un-Display units setting ----------15

2br-Handset brightness setting----------15

3bE-Voice setting ----------15

4Fu-Go up anti-collision sensitivity setting ----------16

5Fd-Go down anti-collision sensitivity setting ----------16

6FS-Balance sensitivity----------17

7SH-Setting the new lowest display and height range ----------17

8Hc-Setting Constant-touch & One-touch ----------18

9St-Time Reminder setting ----------18

10H-Setting bounce height ----------18

11r-Restore Factory Defaults ----------19

12d-Fatigue test mode ----------19

1Un- Display units

Change the numeric display to show heights in either inches or centimeters

Press **"M"** button and hold 3 seconds, handset display **"S--"** ,Release **"S"** button,Press **"M"** button to enter,Display " 1Un",Press **"M"** button again to confirm the first programming setting.

1. It will display SI ,Press S button to get CM display,wait 2 seconds,centimeters setting is done,It will display current height (cm)

2. After it display SI ,press UP or DOWN ,It will display In ,Press button **"S"**,Wait 2 seconds, inches setting is done,It will display current height (Inch)

2br-Handset display brightness

Press **"M"** button and hold 3 seconds, handset display **"S--"** ,Release **"M"** button,Press **"M"** button to enter,Display " 1Un".

1. Press UP/Down ,It will display 2br.
2. Press **"M"** to enter,It will display current brightness level n

n : Means normal brightness, L: Means low brightness, H: Means high brightness

3. Press UP or DOWN to select the desired brightness level,press **"S"** button to confirm,wait 2 seconds,It will display current height.

3bE-Setting voice

Press **"M"** button and hold 3 seconds, handset display **"S--"** ,Release **"S"** button,Press **"M"** button again to enter,Display " 1Un".

1. Press UP or DOWN,It will display "3bE"
2. Press **"M"** button,It will display current sound status ,OFF or On

OFF: Means no voice when you press the button ,On: Means with voice when you press the button.

3. Press UP or DOWN to select OFF or On,then Press **"M"** to confirm,wait 2 seconds,It will display current height.

4Fu-Go up anti-collision sensitivity

The desk has an Anti-Collision Sensitivity that will stop the desk's movement if it hits something on the way up. You can change this Sensitivity level by doing the following:

Press **"M"** button and hold 3 seconds, handset display **"S--"** ,Release **"M"** button,Press **"M"** button again to enter,Display " 1Un".

1. Press UP or DOWN ,It will display 4Fu.
2. Press **"M"** button to enter,It will display current anti-collision sensitivity level.Total 9 levels for up from L1 to L9;

L1 is the most sensitivity setting, L9 is the least sensitivity setting.

3. Press UP or Down to select the your favorite level,Press **"M"** button to confirm,wait 2 seconds,It will display current height.

5Fd-Go down anti-collision sensitivity

The desk has an Anti-Collision Sensitivity that will stop the desk's movement if it hits something on the way down. You can change this Sensitivity level by doing the following:

Press **"M"** button and hold 3 seconds, handset display **"S--"** ,Release **"S"** button,Press **"M"** button again to enter,Display " 1Un".

1.Press UP or DOWN,It will display 5Fd.

2.Press **"S"** button to enter,It will display current anti-collision sensitivity level L5 .Total 9 levels for down from L1 to L9;

L1 is the most sensitivity setting, L9 is the least sensitivity setting.

3.Press UP or Down to select the your favorite level,Press **"M"** button to confirm,wait 2 seconds,It will display current height.

6FS-Balance sensitivity

The desk has a balance Sensitivity to make sure the 2 columns always work in the same position . You can change this Sensitivity level by doing the following:

Press **"M"** button and hold 3 seconds, handset display **"S--"** ,Release **“S”** button,Press **"M"** button again to enter,Display “ 1Un”.

1.Press UP or DOWN ,It will display 6FS.

2.Press **"M"** button to enter,It will display current balance sensitivity level L5.Total 9 levels for down from

L1 to L9;

L1 is the most sensitivity setting, L9 is the least sensitivity setting.

4. Press UP or Down to select the your favorite level,Press **"M"** button to confirm,wait 2 seconds,It will display current height.

7SH-Setting the new lowest display and height range

The desk frame ships defaulted to its minimum and maximum height limits. These steps allow the upper and lower limits to be adjusted to your preference:

Press **"M"** button and hold 3 seconds, handset display **"S--"** ,Release **“S”** button,Press **"M"** button again to enter,Display “ 1Un”.

1.Press UP or DOWN ,It will display 7FS.

2.Press **"M"** button to enter,It will display Hib,Press UP or DWON,It will display LiL and LiH

Hib: Set the lowest position height display LiL:Set a new minimum desk height

LiH:Set a new maximum desk height

5. Press UP or DOWN ,It will display Hib,Press **"M"** button to enter,It will display current lowest height,Press UP or DOWN to set the lowest height display ,Press **“S”** to confirm .

6. Press UP or DOWN ,It will displayLiL ,Press **"M"** button to enter,It will display current lowest height,Press UP or DOWN to set a lowest height position ,Press **"M"** to confirm .

7. Press UP or DOWN ,It will displayLiH ,Press **"M"** button to enter,It will display current highest height,Press UP or DOWN to set a new highest height position ,Press **"M"** to confirm .

8Hc- Setting Constant-touch & One-touch for go Up or Down

Press **"M"** button and hold 3 seconds, handset display **"S--"** ,Release **"M"** button,Press **"M"** button again to enter,Display " 1Un".

1. Press UP or DOWN,It will display 8Hc
2. Press " **S**" button to enter,It will display current mode 001 ,Press UP or DOWN,It will display 002

001 : Keep pressing UP or DOWN button to make the desk moving up or down.

002 : Press UP or DOWN button and release,the desk will moving up or down automatically; Press any button can stop the desk when it moving.

3. Press **"M"** to confirm the the way you need,wait 2 seconds,setting is done.

9St-Reminder setting

To get a healthier working style,the desk can remind you to stand up when you sit in a long time,you can set it by doing the following:

Press **"M"** button and hold 3 seconds, handset display **"S--"** ,Release **"M"** button,Press **"M"** button again to enter,Display " 1Un".

1. Press UP or DOWN go get "9St"
2. Press " **S**" to enter,It will display " 0.0H",It no time reminder ,(H means Hour)
3. Press UP or DOWN to select the time reminder you need ,(1.5H means 1.5 hours),Press " **S**" to confirm.

Note: When handset time reminder beep,press any button to make it disappear ; the time reminder will last 30 seconds if no any operations.

10H-Setting bounce height

Press **"M"** button and hold 3 seconds, handset display **"S--"** ,Release **"M"** button,Press **"M"** button again to enter,Display " 1Un".

1. Press UP or Down to get 10H.
2. Press **"M"** button to enter,It will show current bounce height.
3. Press UP or DOWN to get the bounce height,Press **"M"** to confirm;Wait 2 seconds,It will display current height

11r- Restore Factory Defaults

Press **"M"**button and hold 3 seconds, handset display **"S--"** ,Release **"M"** button,Press **"M"** button again to enter,Display “ 1Un”.

1. Press UP or DOWN ,It will display 11r
2. Press **"M"** to enter,It will display Frt and flash.
3. Press **"M"**to confirm,wait 2 seconds,It will display current height.

12d-Fatigue test mode

Factory use,please ignore this programming.