Assembly Instructions:

Product Code : SB2P1275, SB2P1575, SB2P1875
Product Name: Boost Static Back to Back Workstation

Time Required:

30 minutes

Tools Required:

Screwdriver, Electric Drill, Pencil, Measuring tape/Ruler.
*Tools are not included.

Skill Required:

Easy ●●●○○ Hard

The Assembly Skill Rating is a 5-point system that shows the degree of effort needed in assembling a specific product. With 1 being easy for the average person and 5 requiring an expert.
For most products, two persons are recommended.

Please note, as this is a commercial product, some intermediate skills are required.
*No pre-drill holes or markings are provided on tops.

• As th s may be required.
• Nc ble or desk tops.
embling.
• If you are missing any harc e ensure you have the name of the item,

EFI Furniture
32 Lisa Place, Coolaroo VIC 3048
03 9302 3067
efifurniture.com.au
contact@efifurniture.com

• Please retain your receipt as proof of purchase to validate your warranty.
• Assemble on a clean, flat, smooth surface such as a rug or carpet to avoid parts from being scratched.
• Remove all wrapping materials, including staples and packing straps before you start to assemble
• Keep all hardware parts out of reach of children.

CAUTION

• Heavy product. Do not attempt to lift or move without help
• Do not tighten screws and bolts until completely assembled.
• Do not use this product unless all bolts and screws are firmly secured and tightened.

WARNING

• If parts are missing, broken, damaged or worn stop using the product until all repairs are made.
• Failure to follow these warnings could result in serious injury.

Boost Static Back To Back Fixed Height Workstation

Instruction Manual

Table of Contents

Component parts 2

Assembly Instructions 3

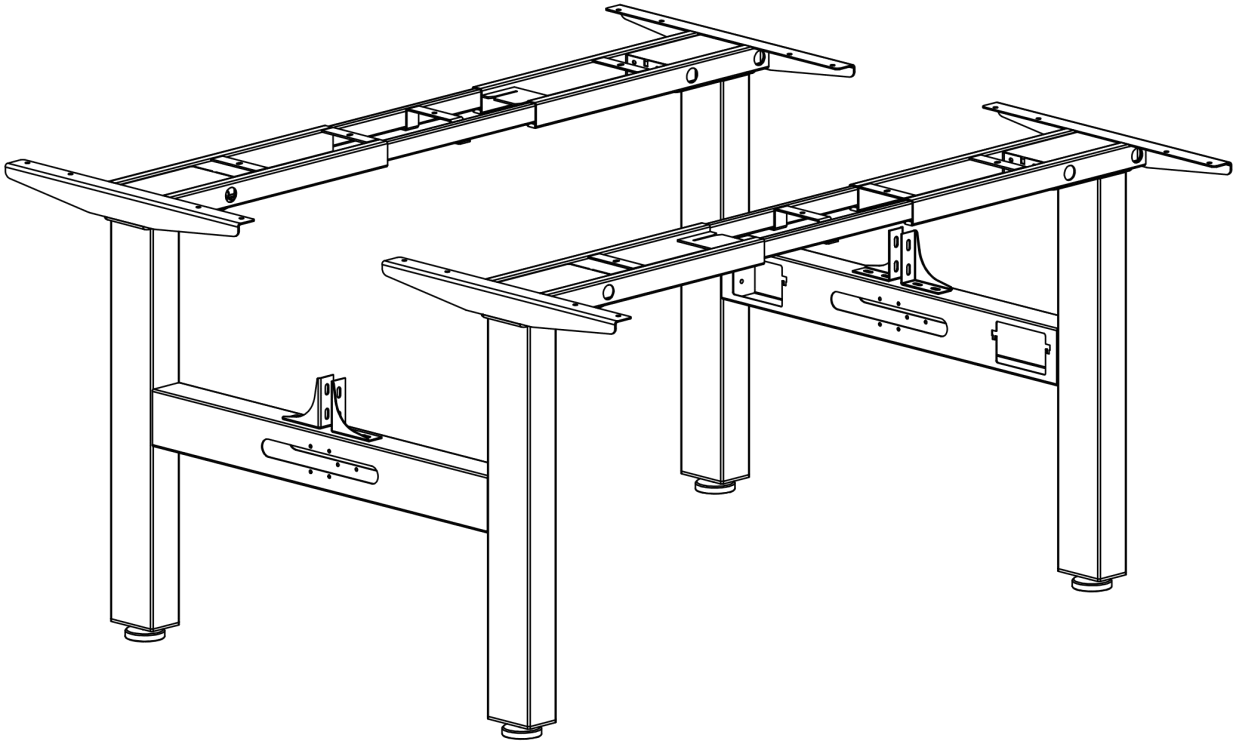

Component parts

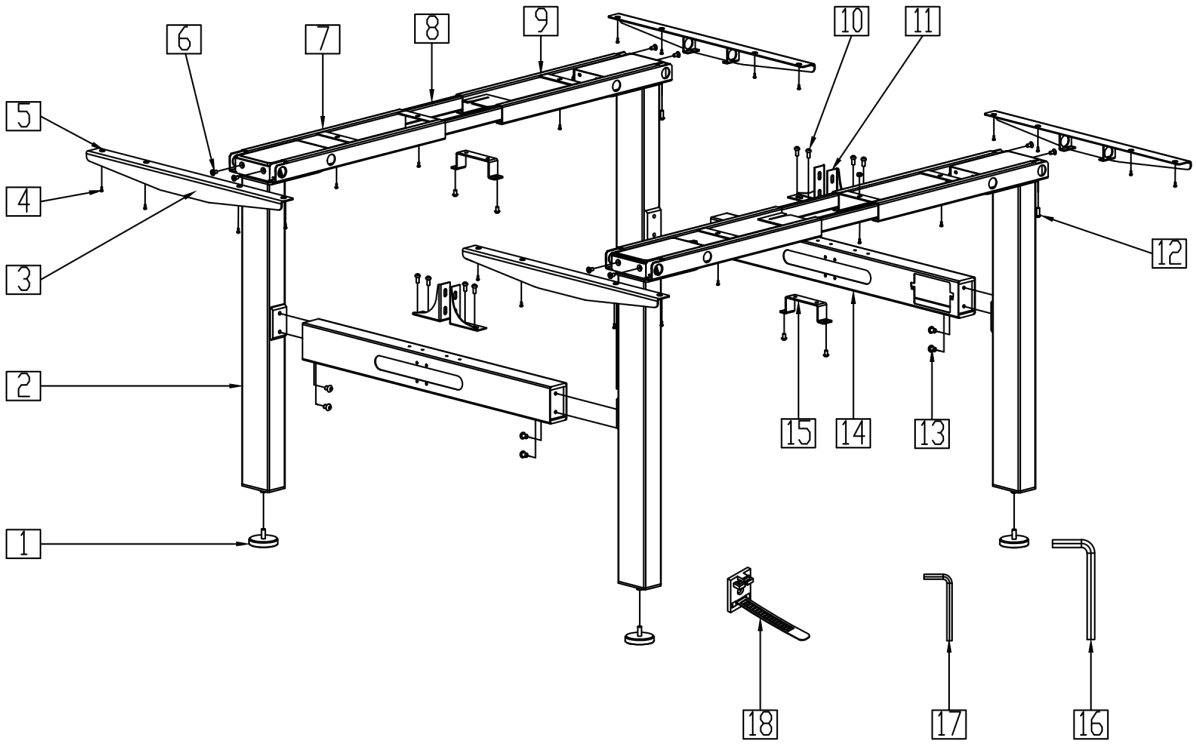

NO.	Component Name	PCS		NO.	Component Name	PCS
1	Leveling pad	4		10	Bolts M6x10	14
2	Column	4		11	Screen brackets	4
3	Side Bracket	4		12	Bolts M6x16	10
4	ST4x20	40		13	Bolts M8x10	8
5	Rubber pad	24		14	Connected beam	2
6	Bolts M6x12	10		15	Centre bracket	2
7	Top frame -1	2		16	Allen Wrench(5mm)	1
8	Centre rails	4		17	Allen Wrench(4mm)	1
9	Top frame-2	2		18	Cable Tie	10

Assembly Instructions

Step 1

Loosen the pre-installed bolts and Adjust the length of the top frame to match the size of the table top.

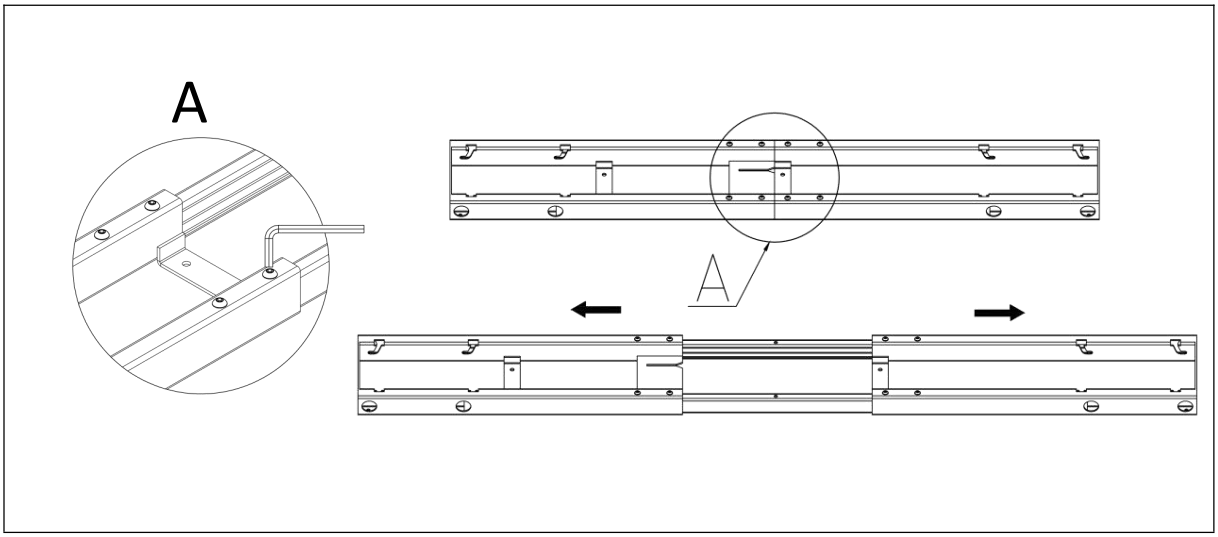

Step 2

Inset the column to the top frame.

- First fix 8pcs screws M6x12 like **B** displayed
- And then tighten the pre-installed bolts like **C** displayed

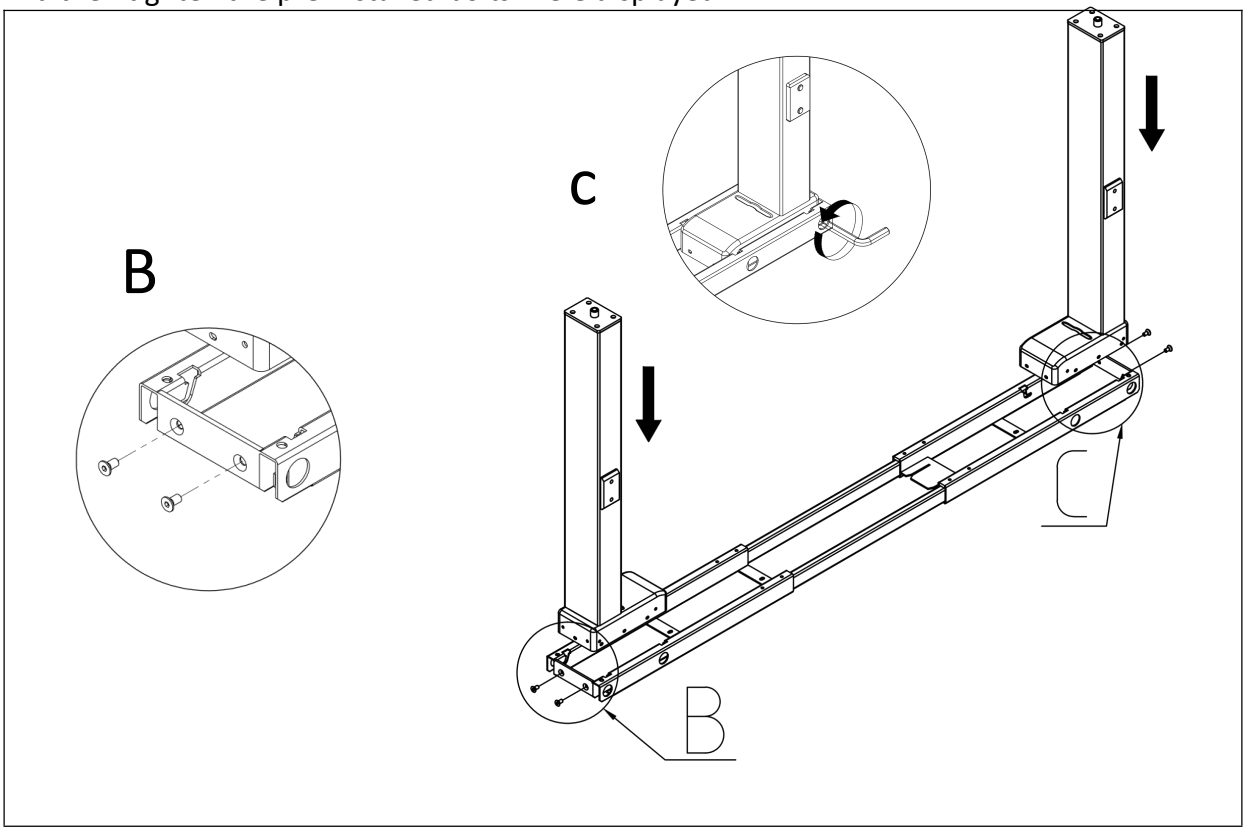

Step 3

Install the side brackets with Screws 8 pcs M6x16,

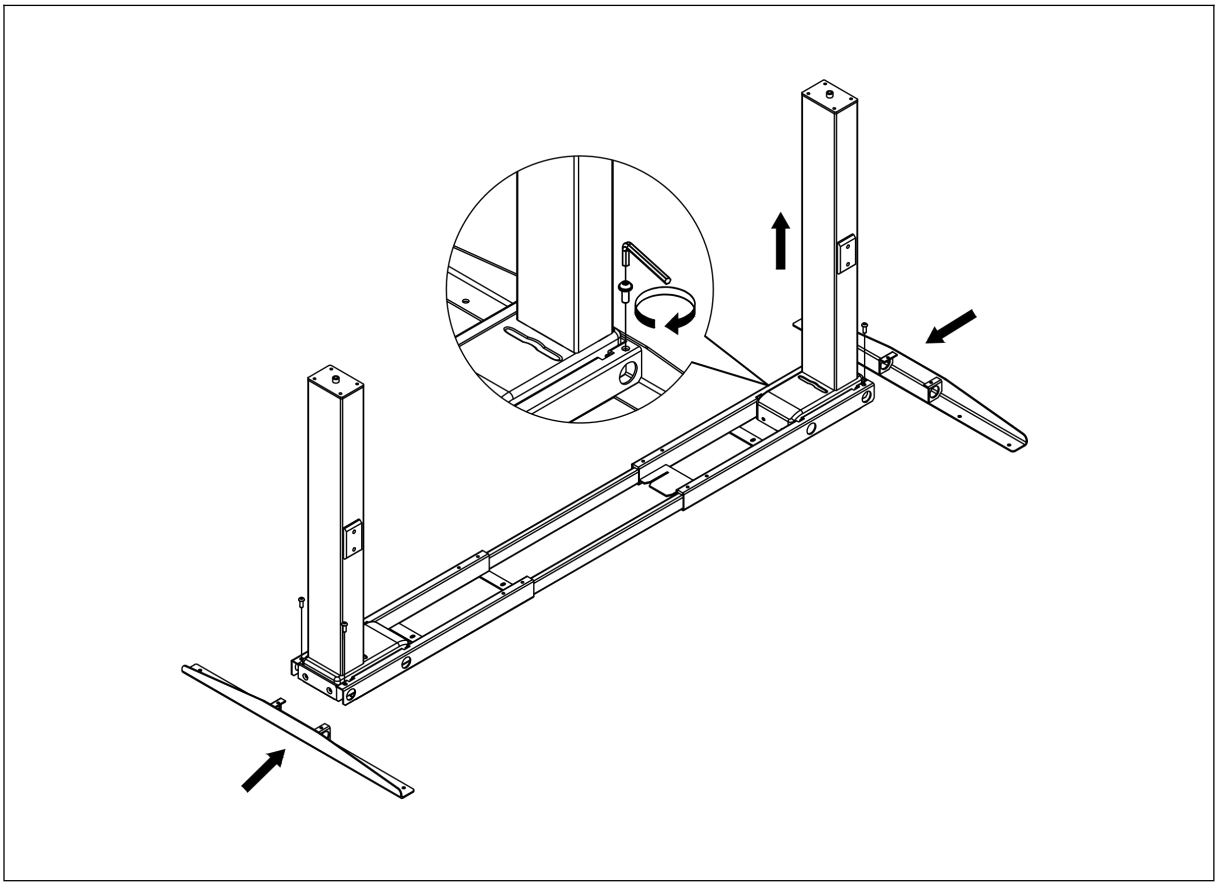

Step 4

Install the leveling pads

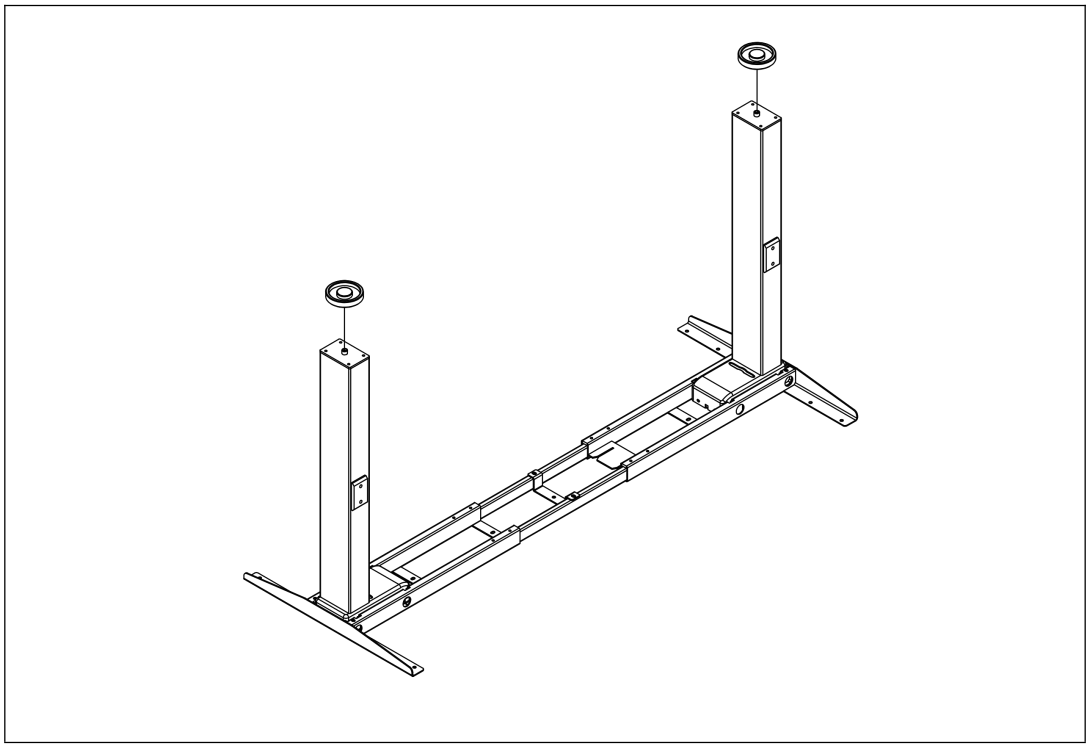

Step 5

Install the connected pipe with 8 pcs screws M8x10

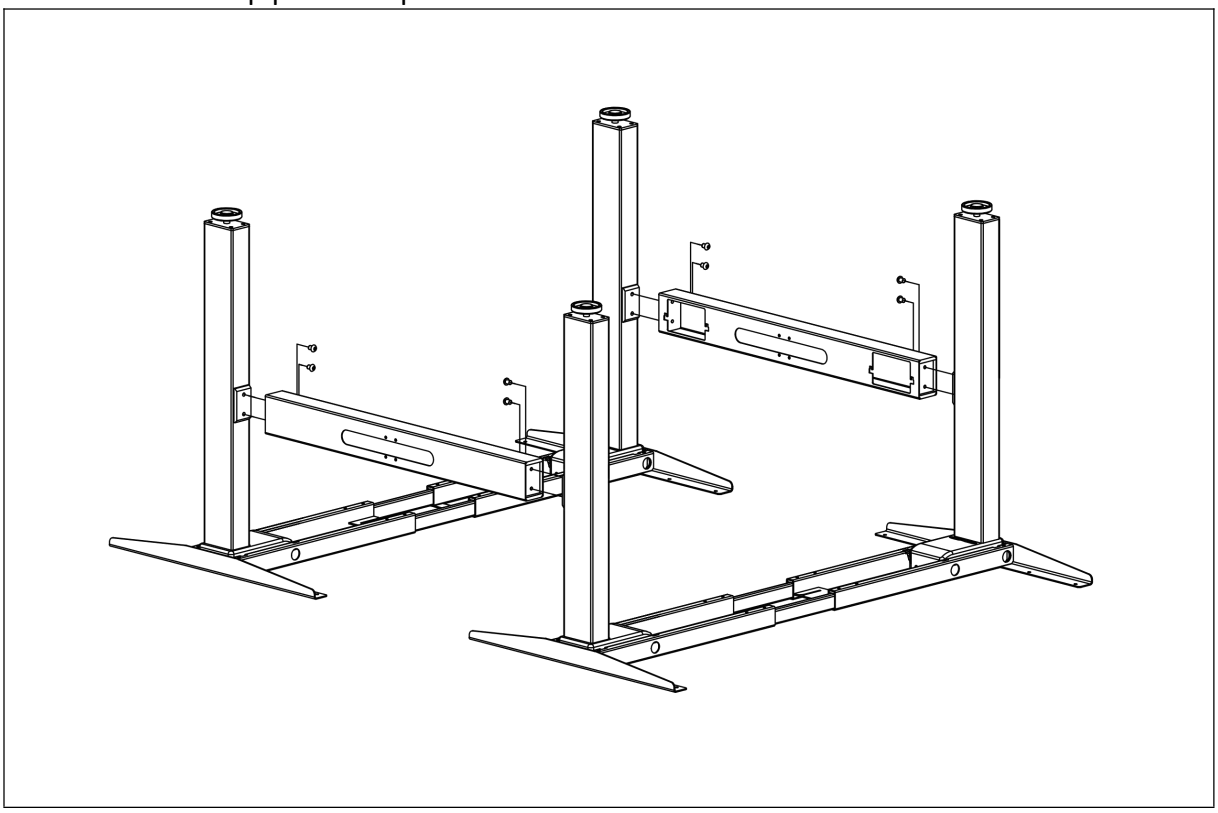

Step 6

Fix the screen brackets with 8 pcs screws M6x10.

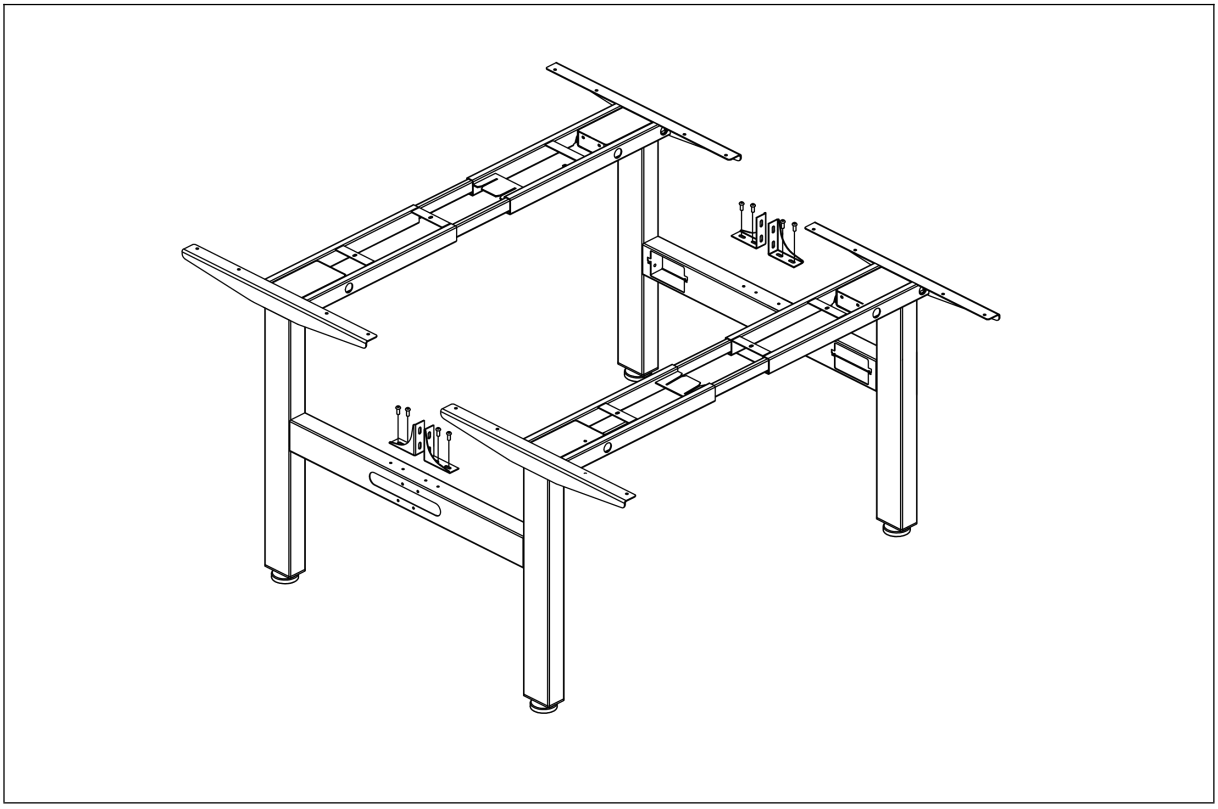

Step 7

Fix the table top with 26pcs screws ST4x20 ,Install the centre bracket with 4 pcs screws M6x10

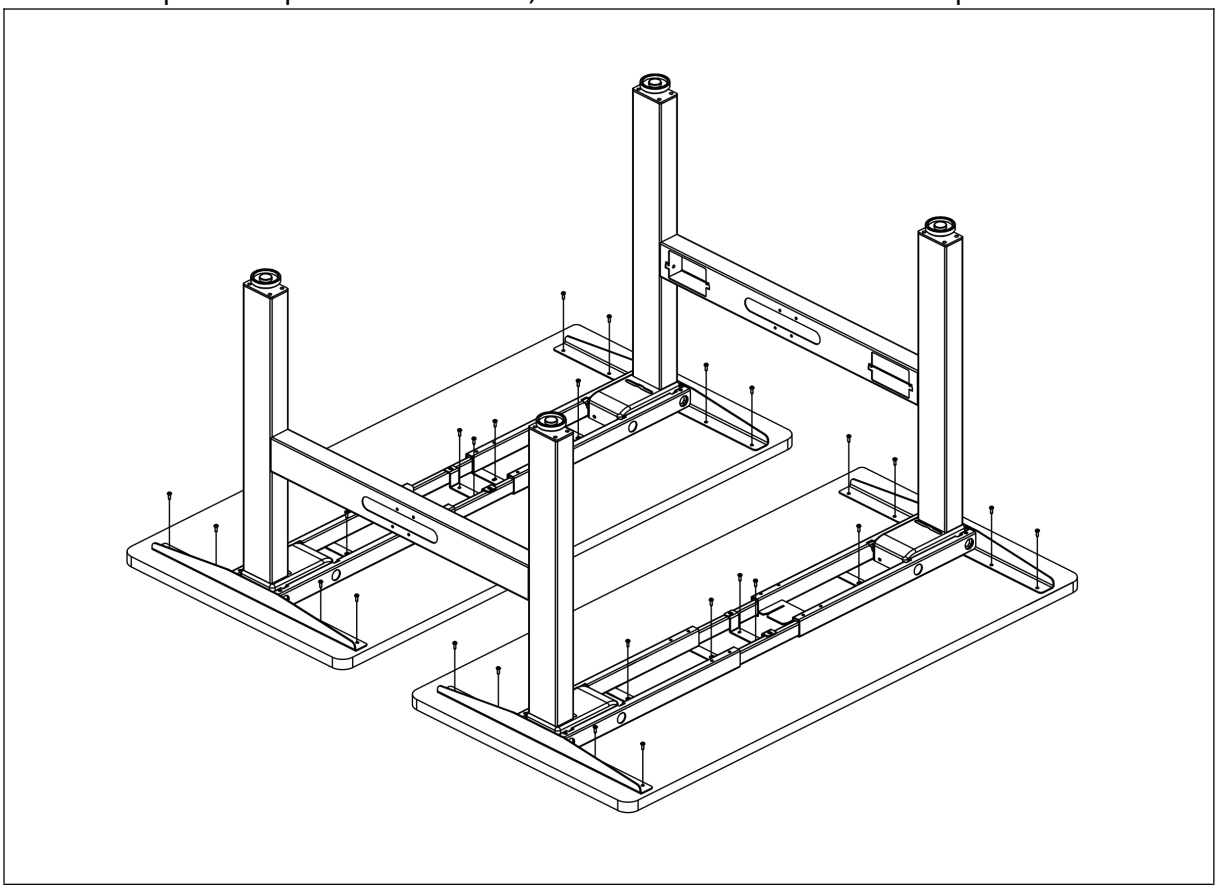

Screen panel installation

Step 1

- Insert the tapped plates to the screen panel

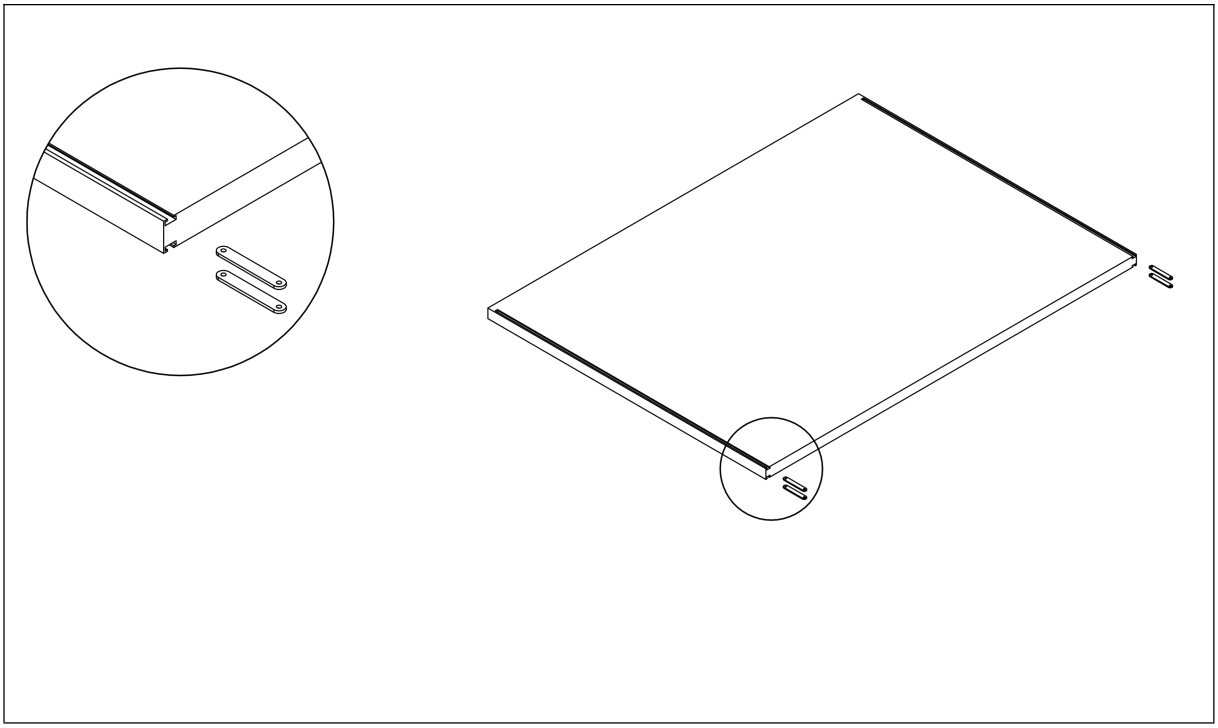

Step 2

- Install the brackets to the panel with 8 pcs M5x6 screws.

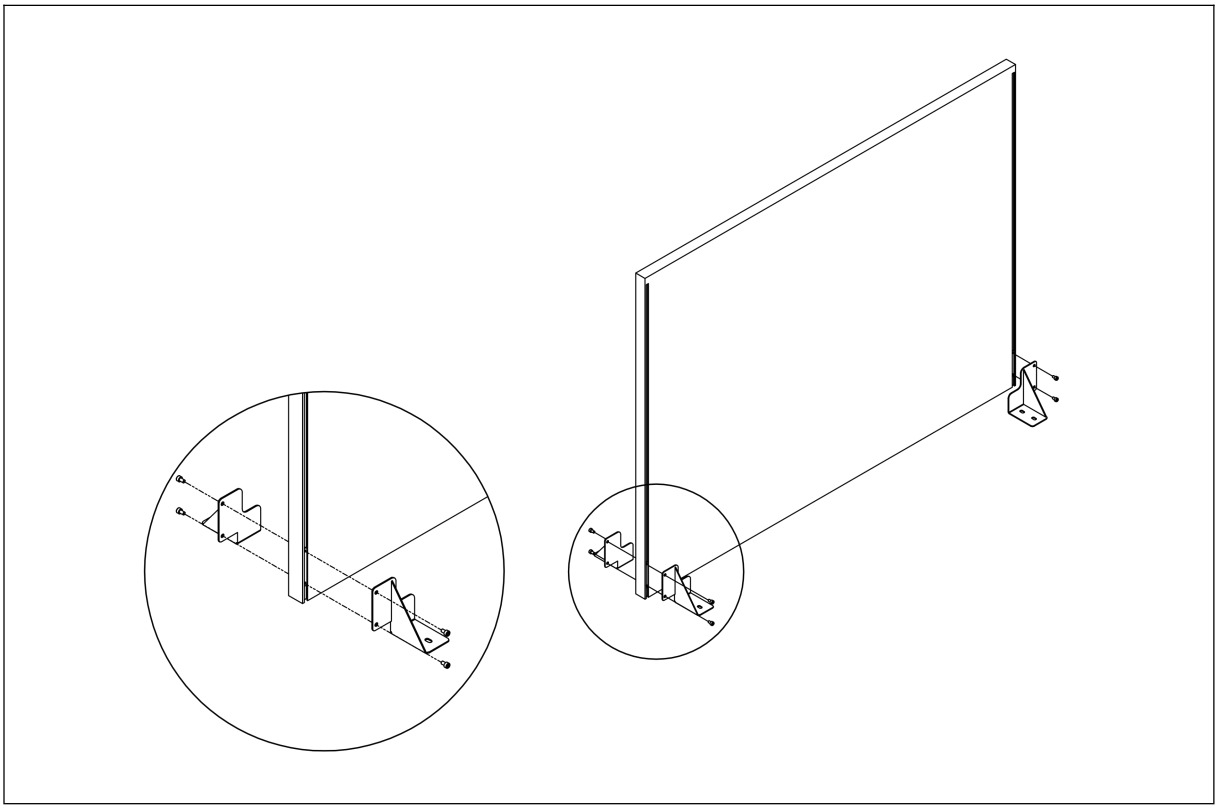

Step 3
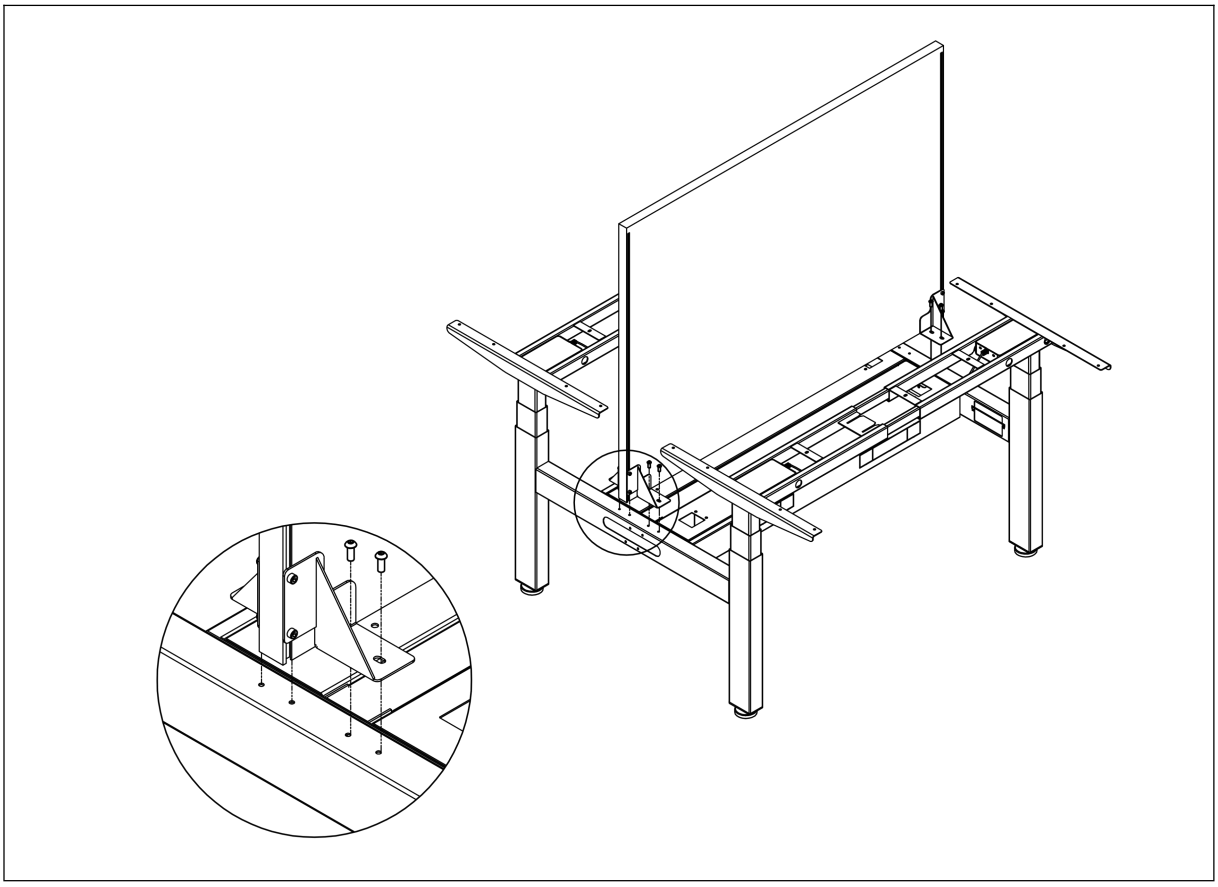
- Fix the panel to the desk frame with 8 pcs M6x10 screws.