Assembly Instructions:

Product Code : SBCNR1P1515, SBCNR1P1815, SBCNR1P1818
Product Name: Boost Static Corner Workstation

Time Required:

30 minutes

Tools Required:

Screwdriver, Electric Drill, Pencil, Measuring tape/Ruler.
*Tools are not included.

Skill Required:

Easy ●●●○○ Hard

The Assembly Skill Rating is a 5-point system that shows the degree of effort needed in assembling a specific product. With 1 being easy for the average person and 5 requiring an expert.
For most products, two persons are recommended.

Please note, as this is a commercial product, some intermediate skills are required.
*No pre-drill holes or markings are provided on tops.

• As th s may be required.
• Nc ble or desk tops.
embling.
• If you are missing any harc e ensure you have the name of the item,

EFI Furniture
32 Lisa Place, Coolaroo VIC 3048
03 9302 3067
efifurniture.com.au
contact@efifurniture.com

• Please retain your receipt as proof of purchase to validate your warranty.
• Assemble on a clean, flat, smooth surface such as a rug or carpet to avoid parts from being scratched.
• Remove all wrapping materials, including staples and packing straps before you start to assemble
• Keep all hardware parts out of reach of children.

CAUTION

• Heavy product. Do not attempt to lift or move without help
• Do not tighten screws and bolts until completely assembled.
• Do not use this product unless all bolts and screws are firmly secured and tightened.

WARNING

• If parts are missing, broken, damaged or worn stop using the product until all repairs are made.
• Failure to follow these warnings could result in serious injury.

Boost Static Return Fixed Height Workstation Frame

Instruction Manual

Table of Contents

Component parts 2

Assembly Instructions 3

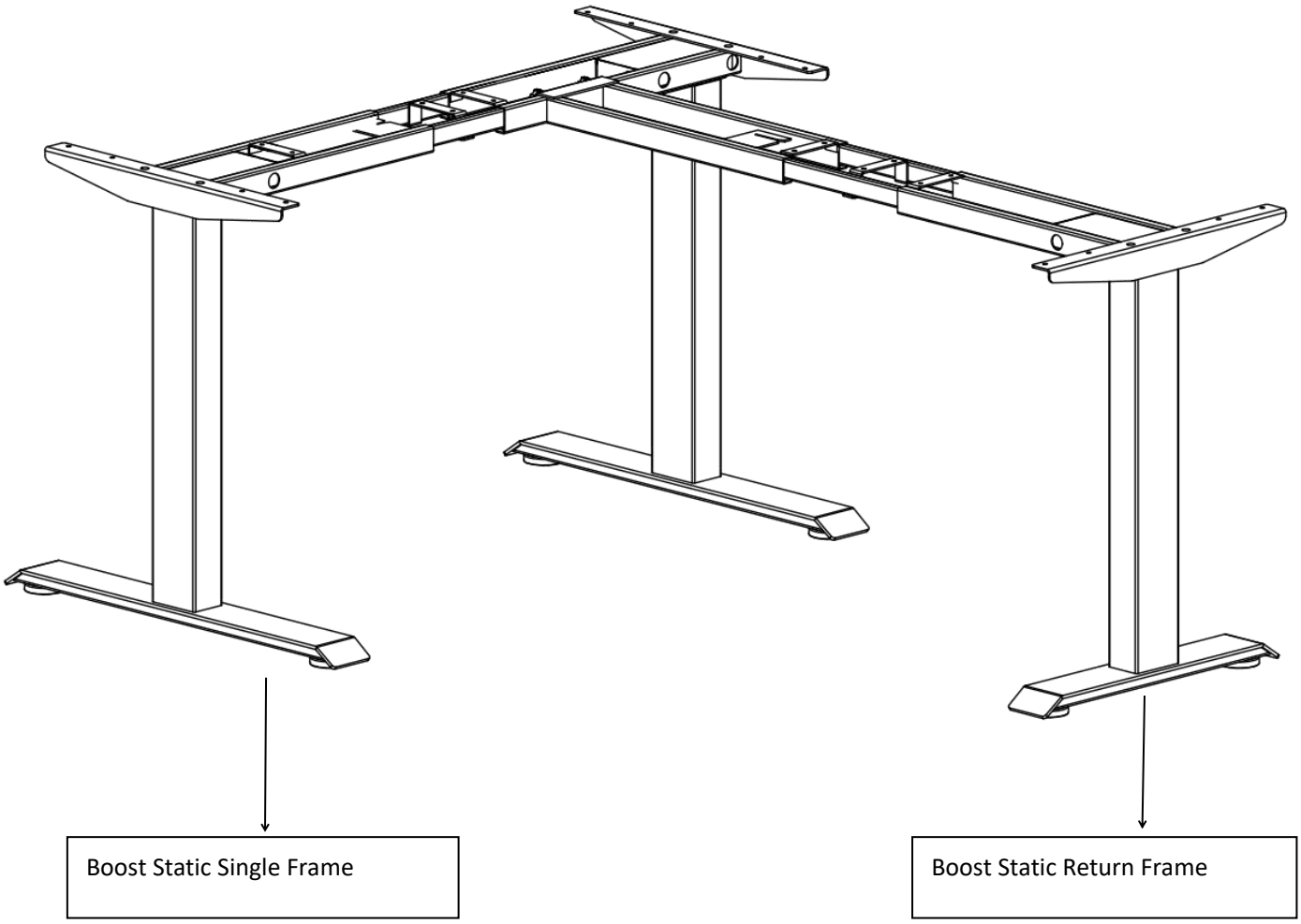

Component parts

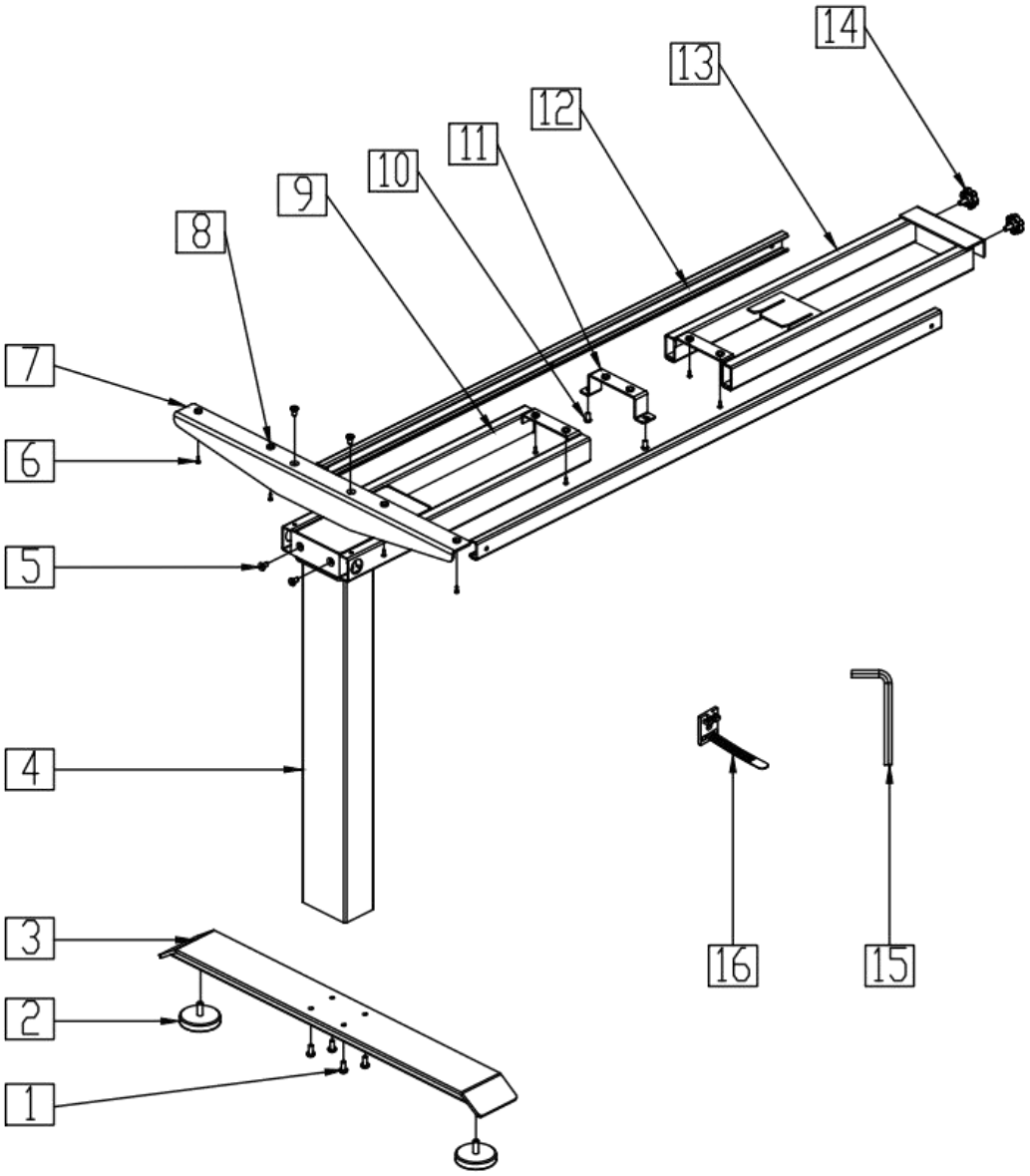

NO.	Component Name	PCS		NO.	Component Name	PCS
1	Bolt: M6x16	5		9	Top frame-1	1
2	Leveling pads	2		10	Bolt: M6x10	3
3	Table feet	1		11	Centre bracket	1
4	Column	1		12	Center rails	2
5	Bolt: M6x12	4		13	Top frame-2	1
6	Screw:ST4x20	13		14	Hand bolts M6x10	2
7	Side brackets	1		15	Allen Wrench(4mm)	1
8	Rubber pad	10		16	Cable tie	2

Assembly Instructions

Step 1

Loosen the pre-installed bolts and Adjust the length of the top frame to match the size of the table top.

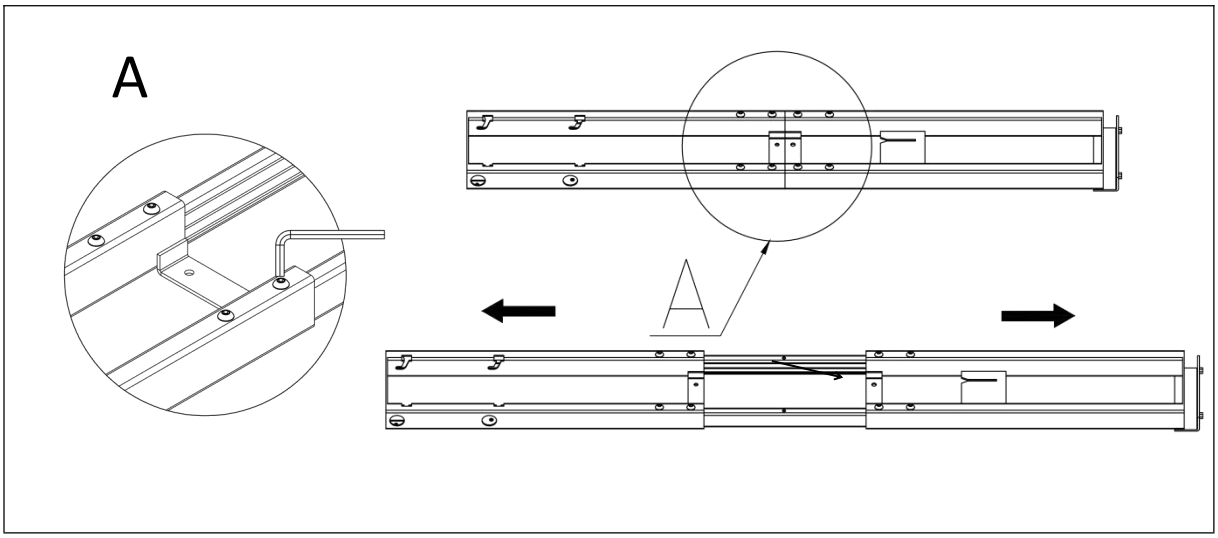

Step 2

Inset the column to the top frame.

- First fix 2pcs screws M6x12 like **C** displayed
- And then tighten the pre-installed bolts like **B** displayed

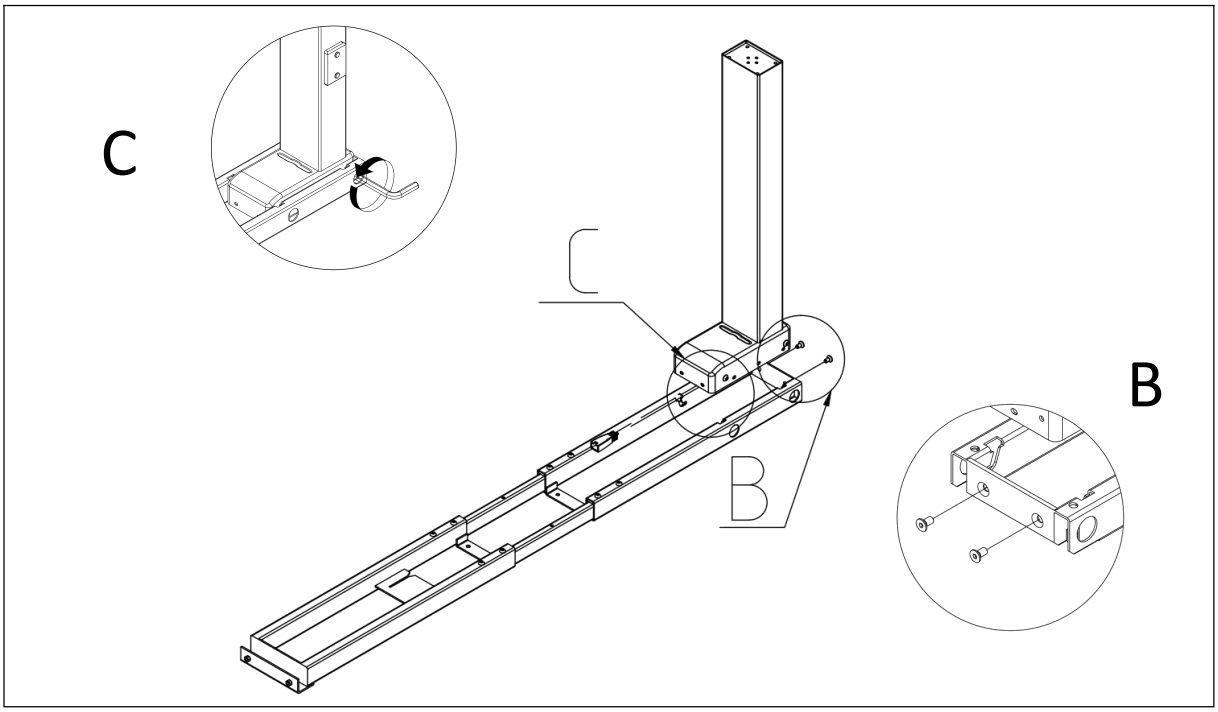

Step 3

Install the table feet Screws 4 pcs M6x16,install the 4 leveling pads.

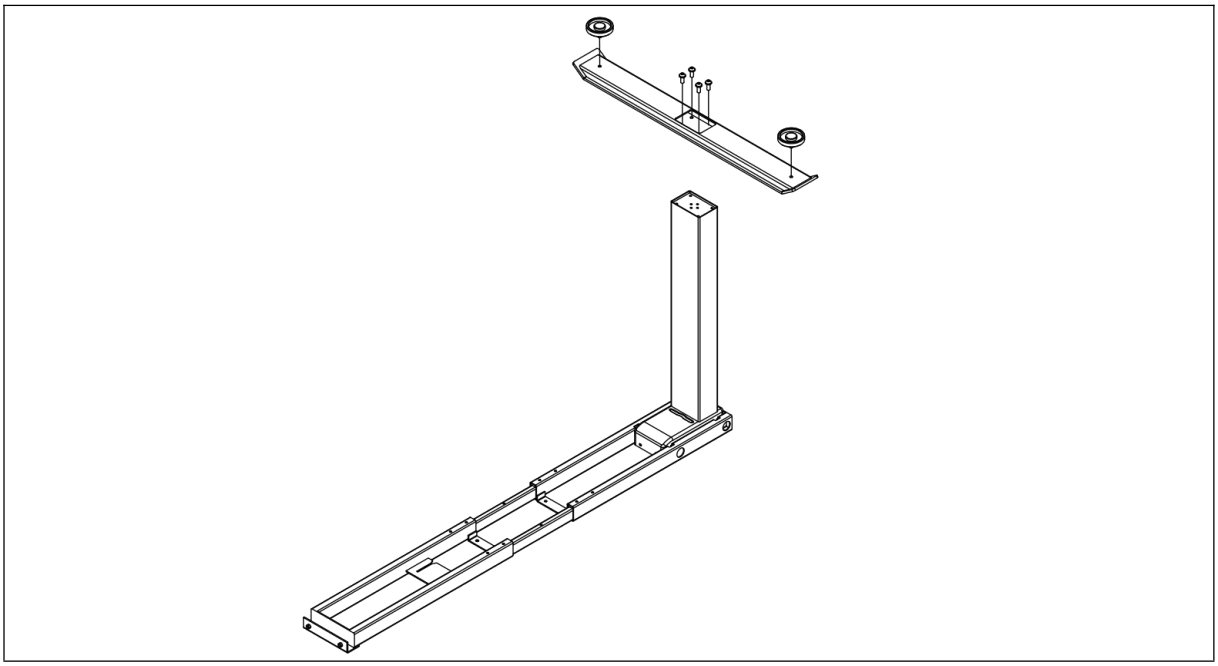

Step 4

Install the side bracket with Screws 2 pcs M6x12,

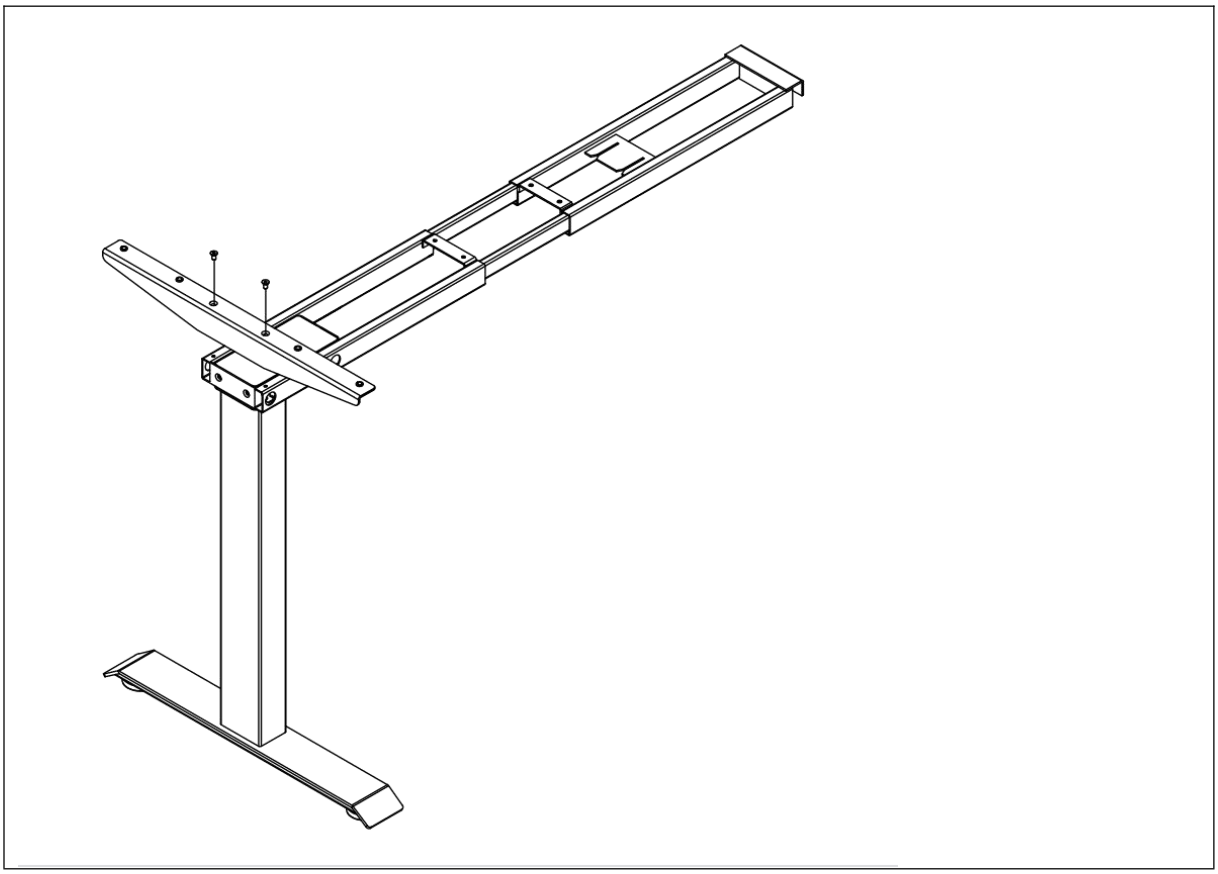

Step 5

Connect the return frame to the single workstation and fixed with 2 hand bolts.
Fix the centre brackets with 2pcs screws M6x10.

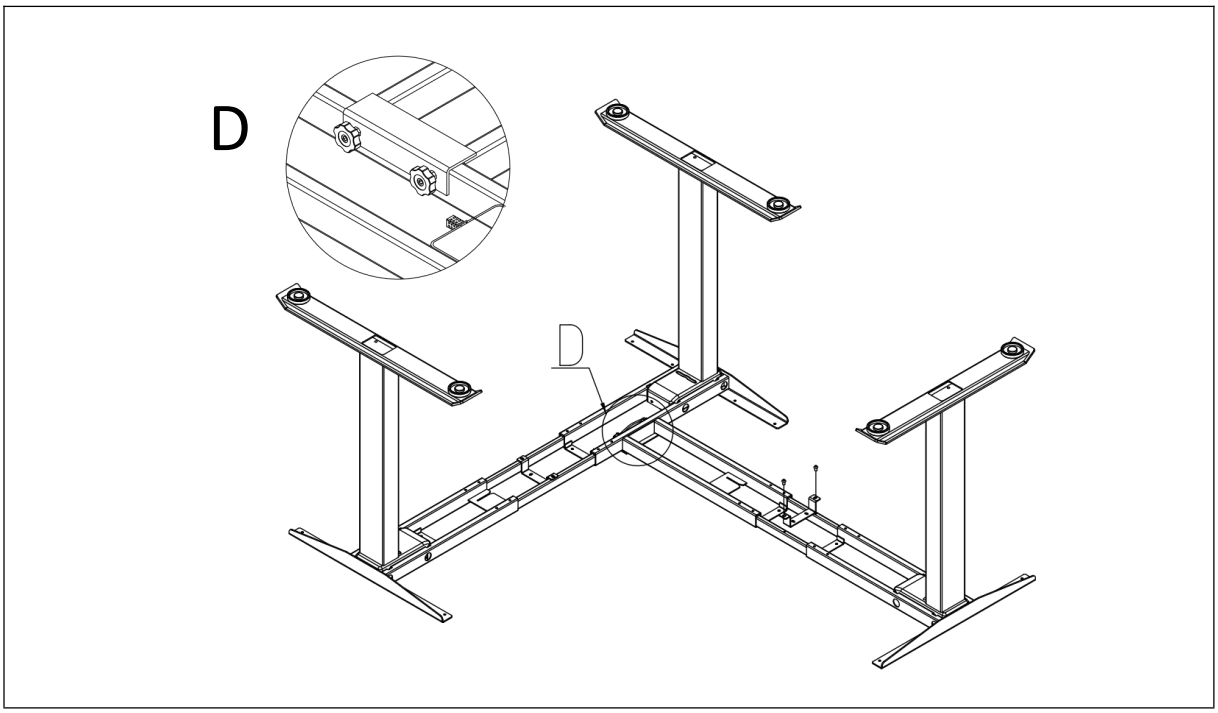

Step 6
Mount the tabletop and fix it with 24 pcs screws ST4x20
Tighten the bolts on top frame to fix it.

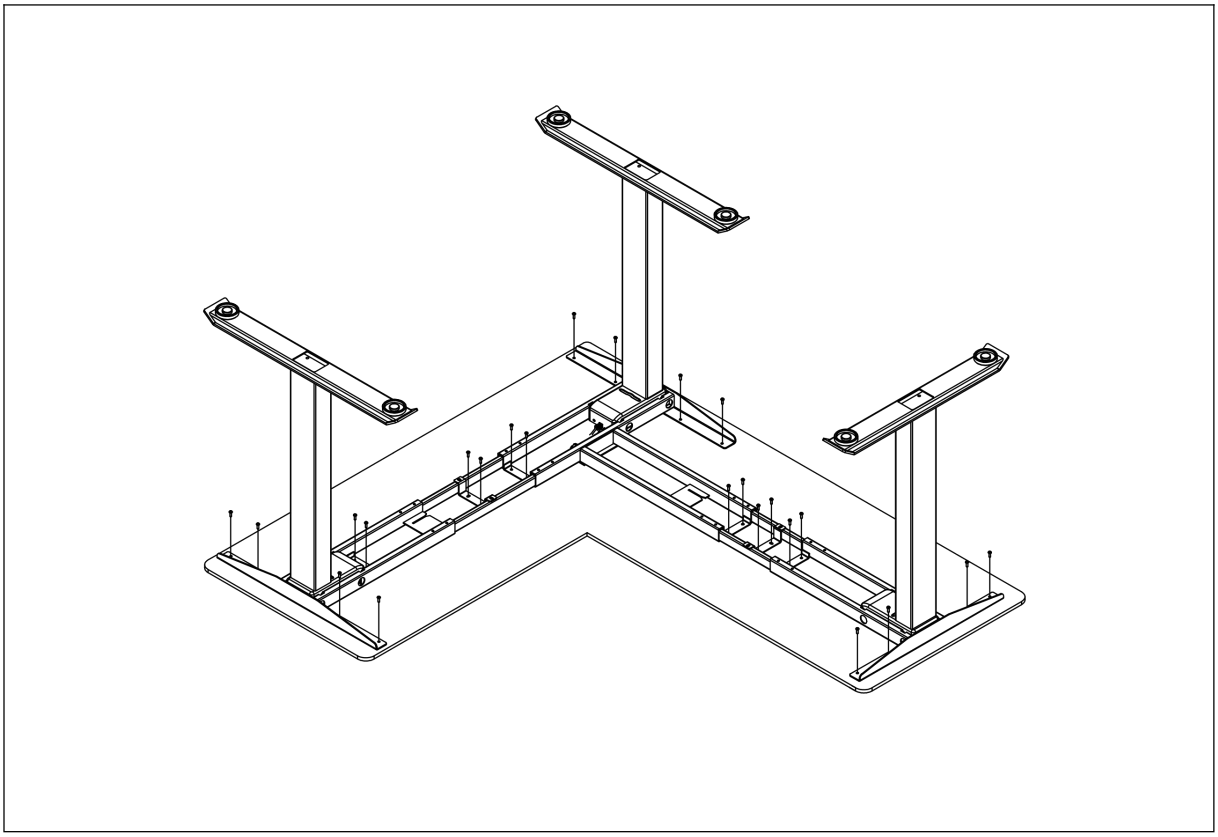

Boost Plus Single Sided Fixed Height Workstation Frame

Instruction Manual

Table of Contents

Component parts 2

Assembly Instructions 3

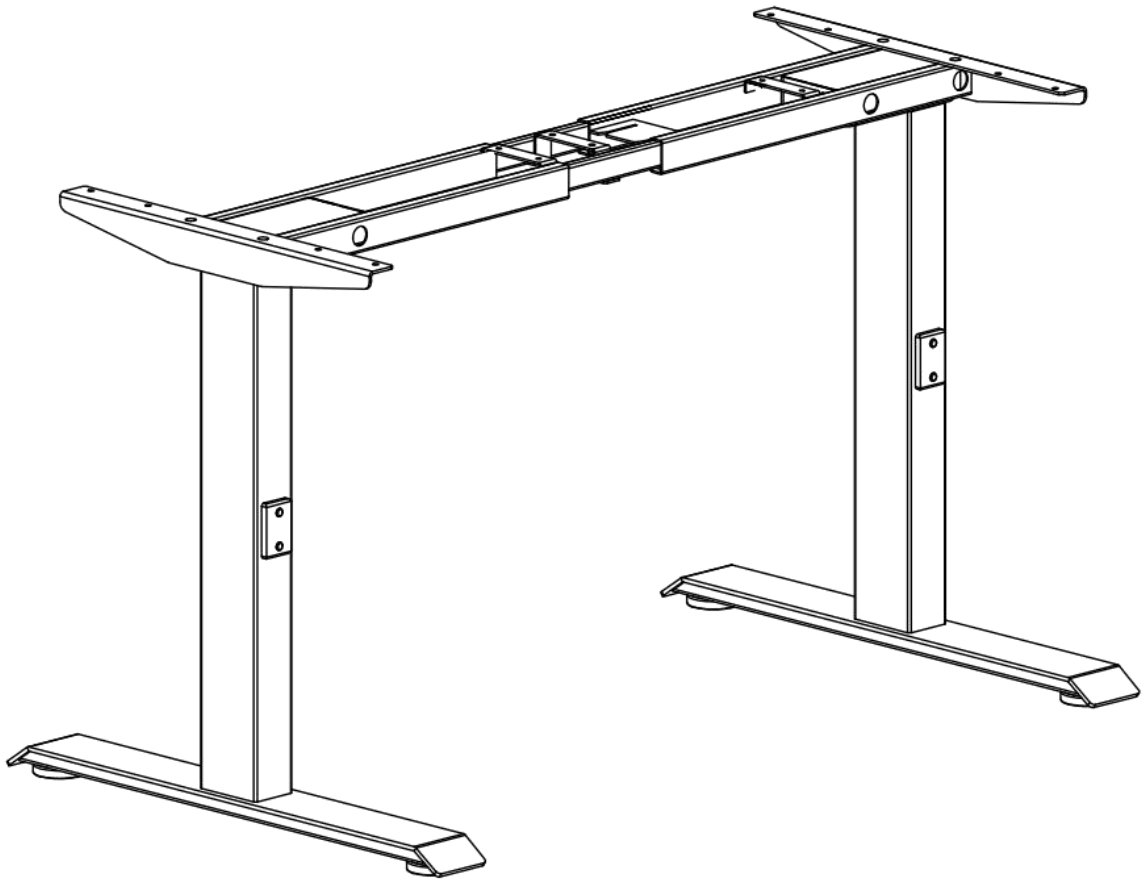

Component parts

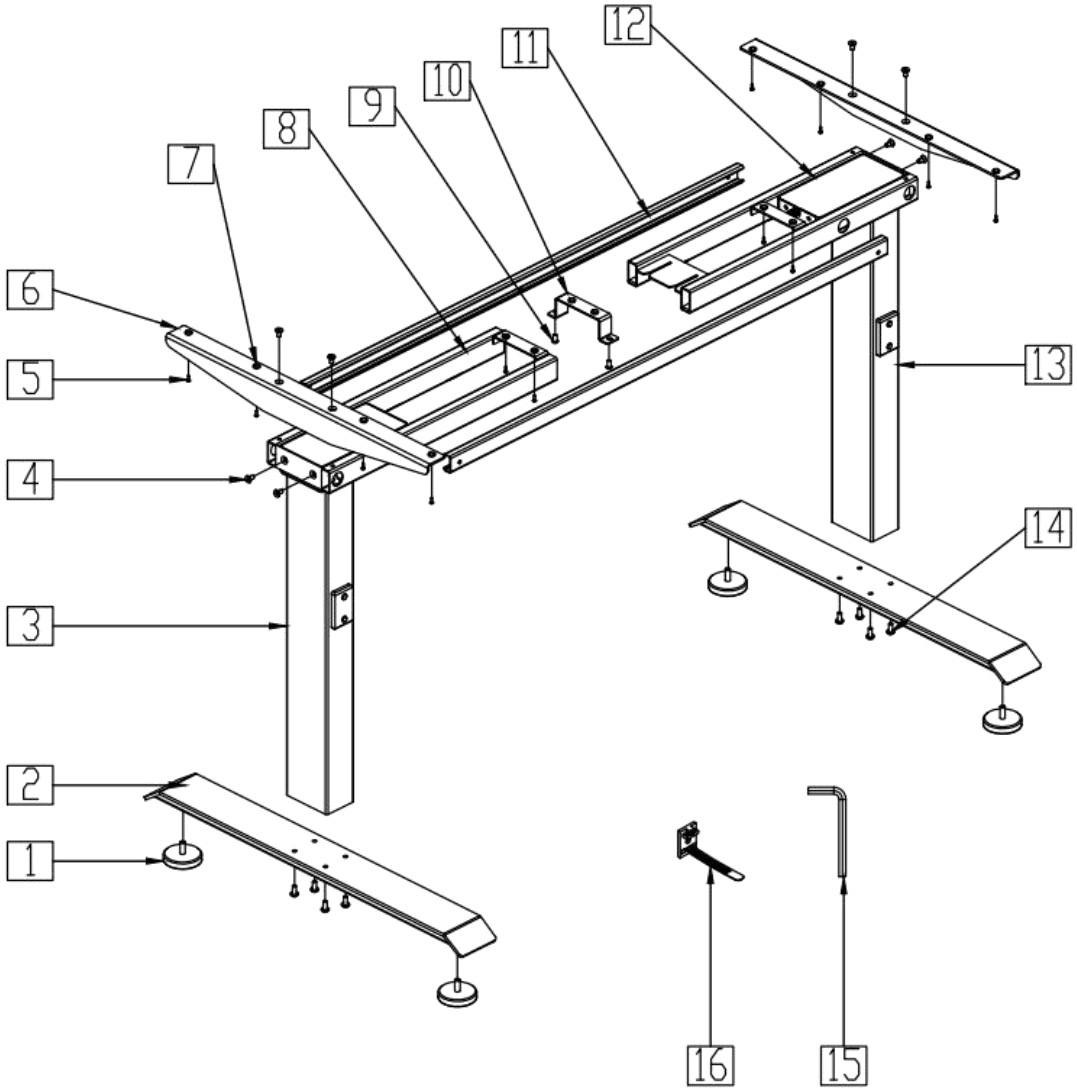

NO.	Component Name	PCS		NO.	Component Name	PCS
1	Leveling pads	4		9	Bolt: M6x10	3
2	Table feet	2		10	Centre bracket	1
3	Column(right)	1		11	Center rails	2
4	Bolt: M6x12	9		12	Top frame-2	1
5	Screw:ST4x20	22		13	Column(left)	1
6	Side brackets	2		14	Bolt: M6x16	9
7	Rubber pad	14		15	Allen Wrench(4mm)	1
8	Top frame-1	1		16	Cable Tie	5

Assembly Instructions

Step 1

Loosen the pre-installed bolts and Adjust the length of the top frame to match the size of the table top.

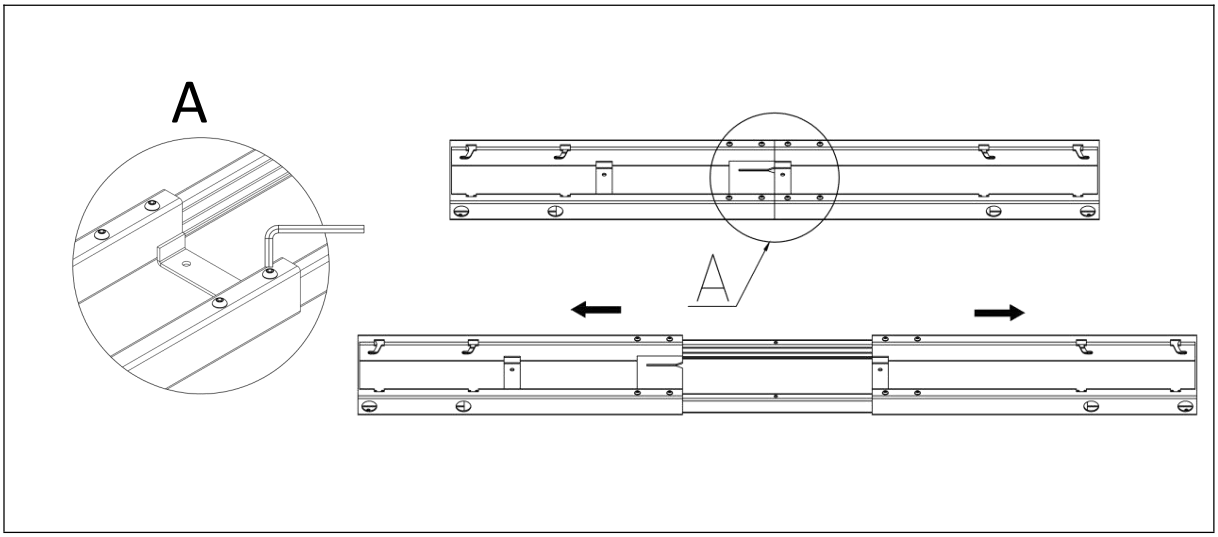

Step 2

Inset the column to the top frame.

- First fix lifting column with 4pcs screws M6x12 like **B** displayed
- And then tighten the pre-installed bolts like **C** displayed

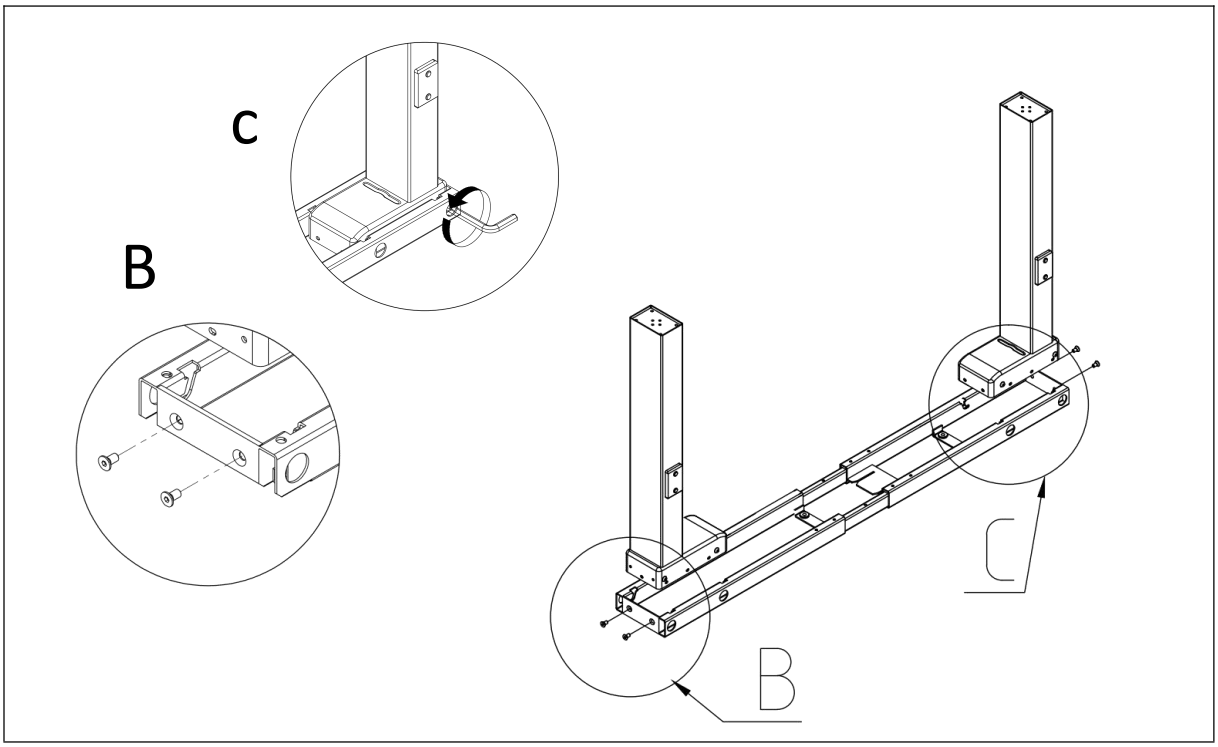

Step 3

Install the two table feet with Screws 8 pcs M6x16,

Install the 4 pcs leveling pads

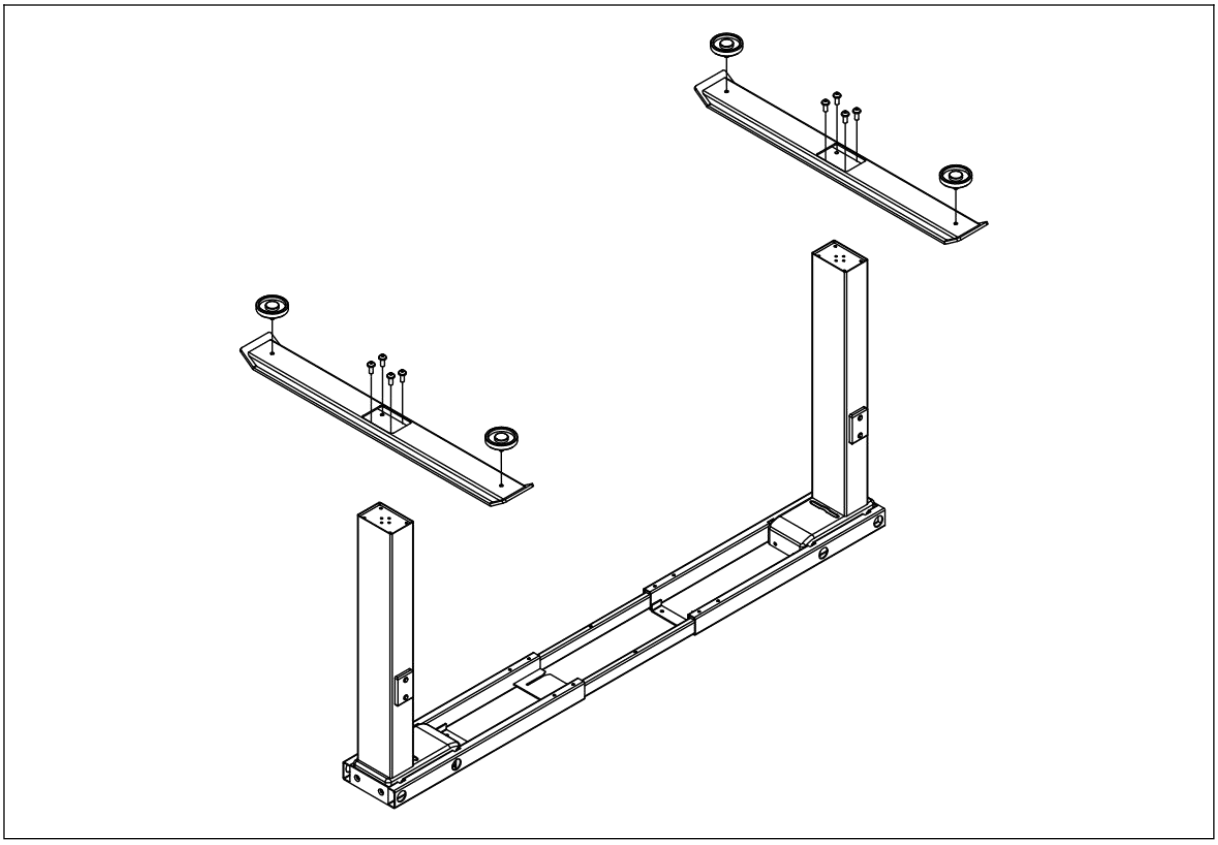

Step 4

Install the two side brackets with Screws 4 pcs M6x12,

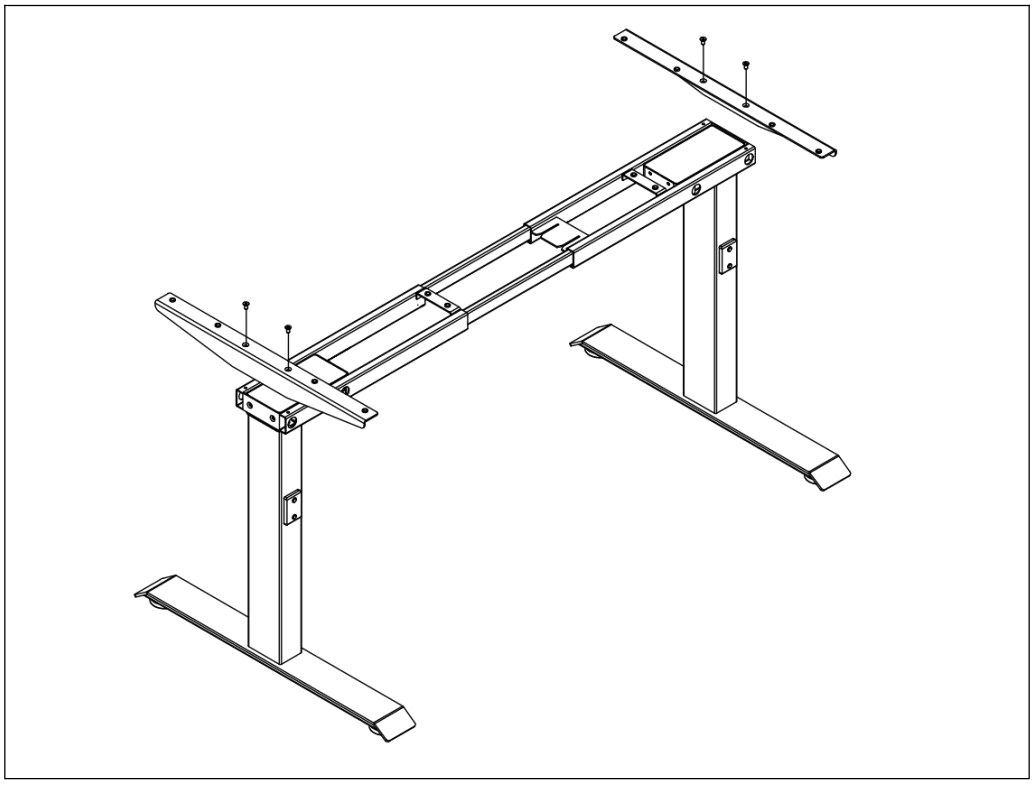

Step 5

Mount the tabletop and fix it with 14 pcs screws ST4x20; Tighten the screws like D display to fix the top frame.Fix the centre bracket with 2 pcs screws M6x10

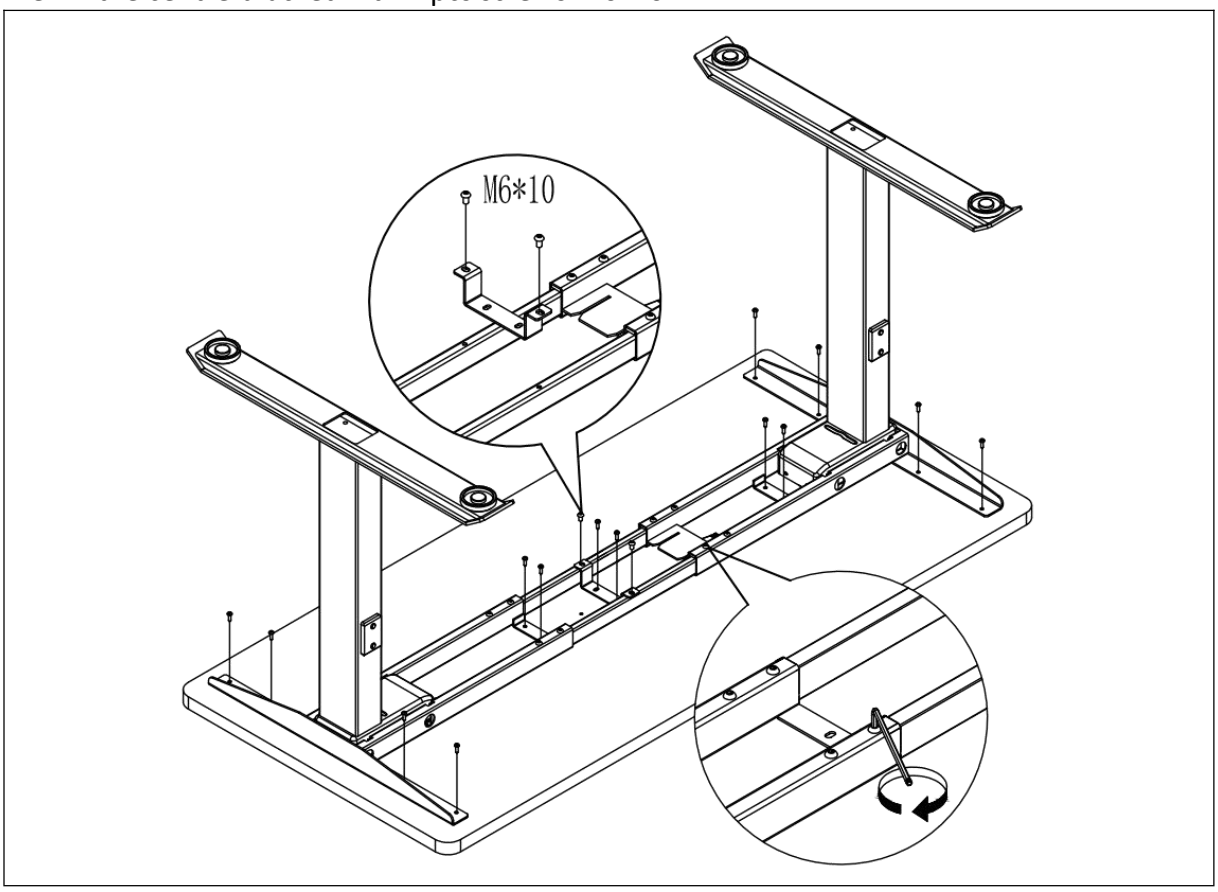

Cable tray installation

Step 1

- Fix the cable tray to the cable tray arms with 8 pcs M6x10 screws.

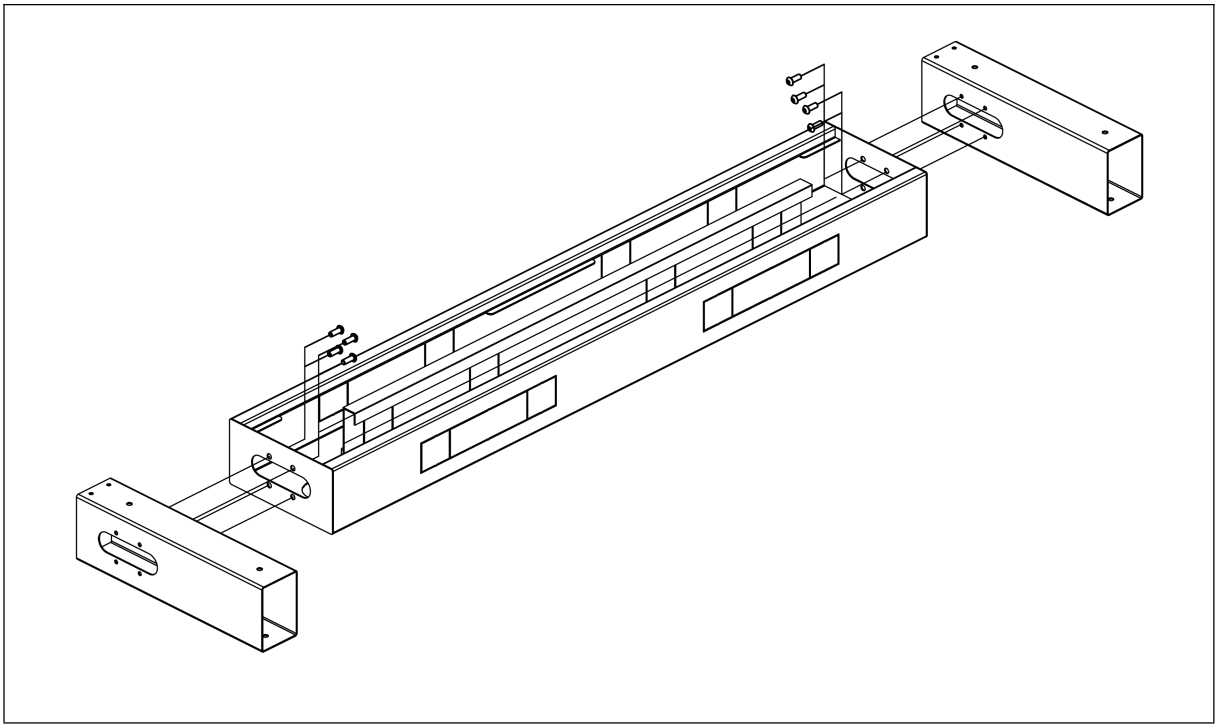

Step 1

- Install the U brackets to the desk frame with 4 pcs M8x10 screws.
- Mount the cable tray to the desk frame and fix it with 6 pcs M6x10 screws

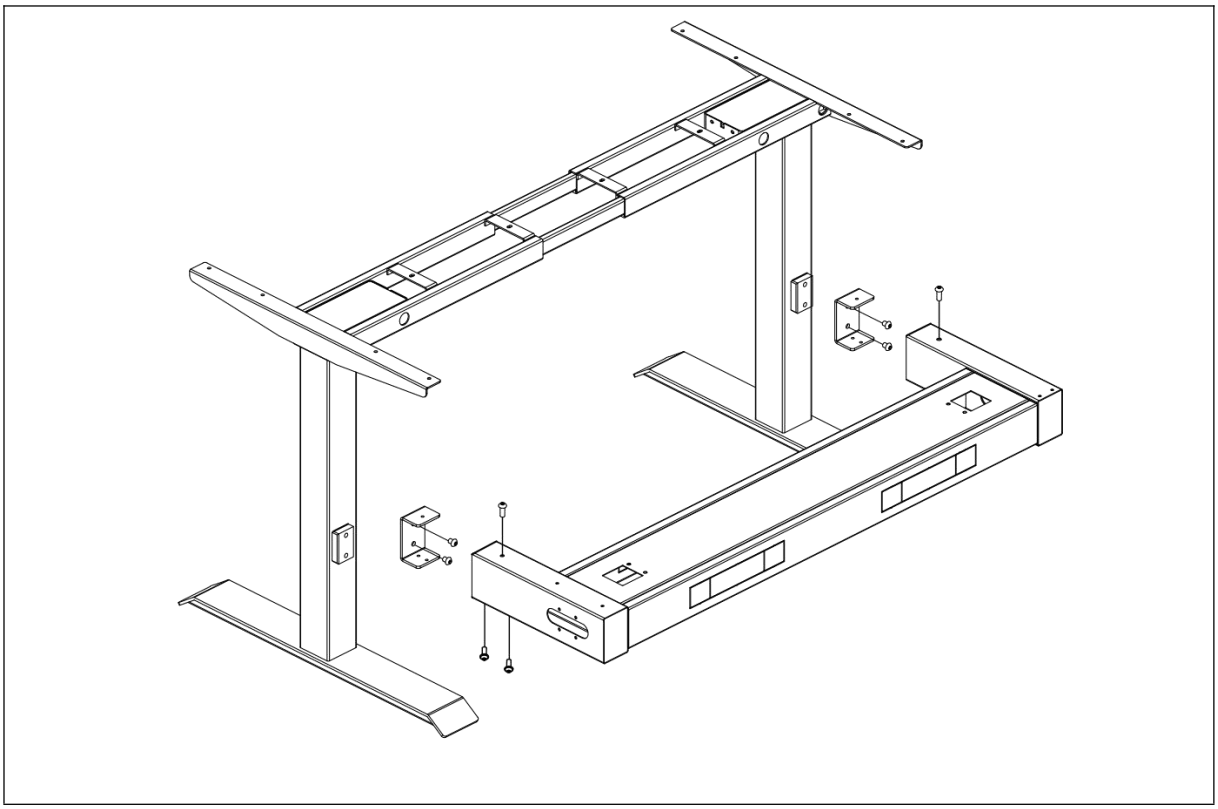

Screen panel installation

Step 1

- Insert the tapped plates to the screen panel

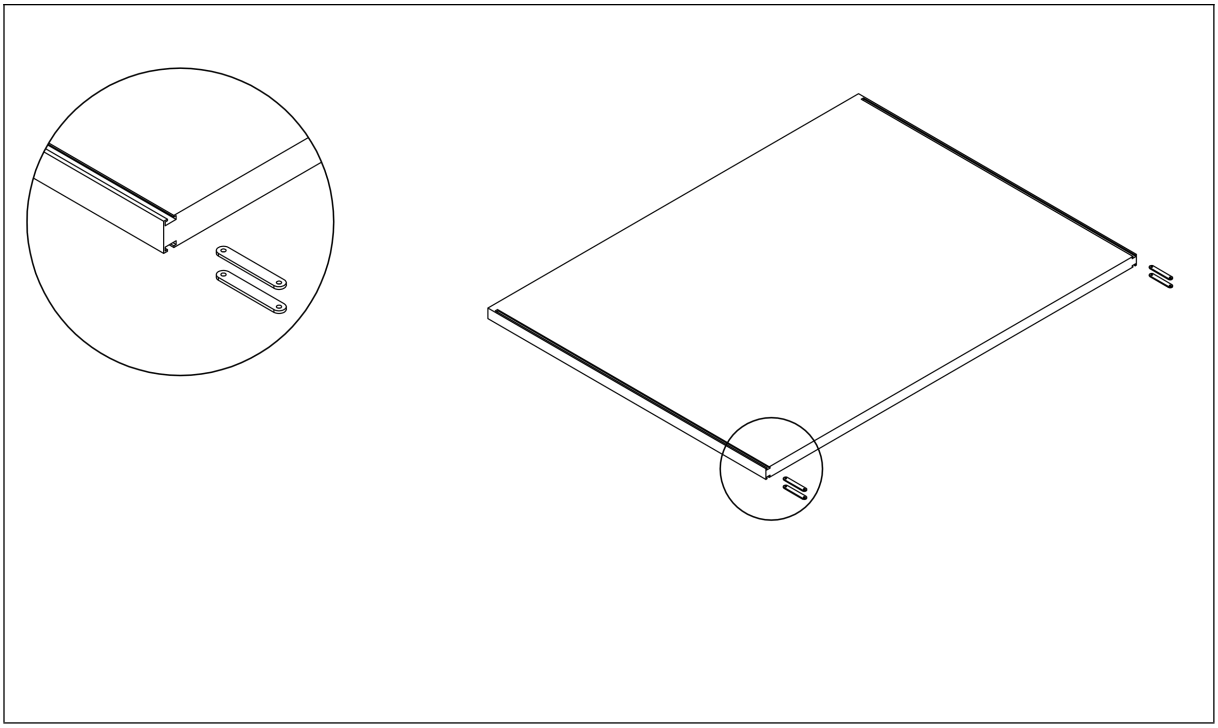

Step 2

- Install the brackets to the panel with 8 pcs M5x6 screws.

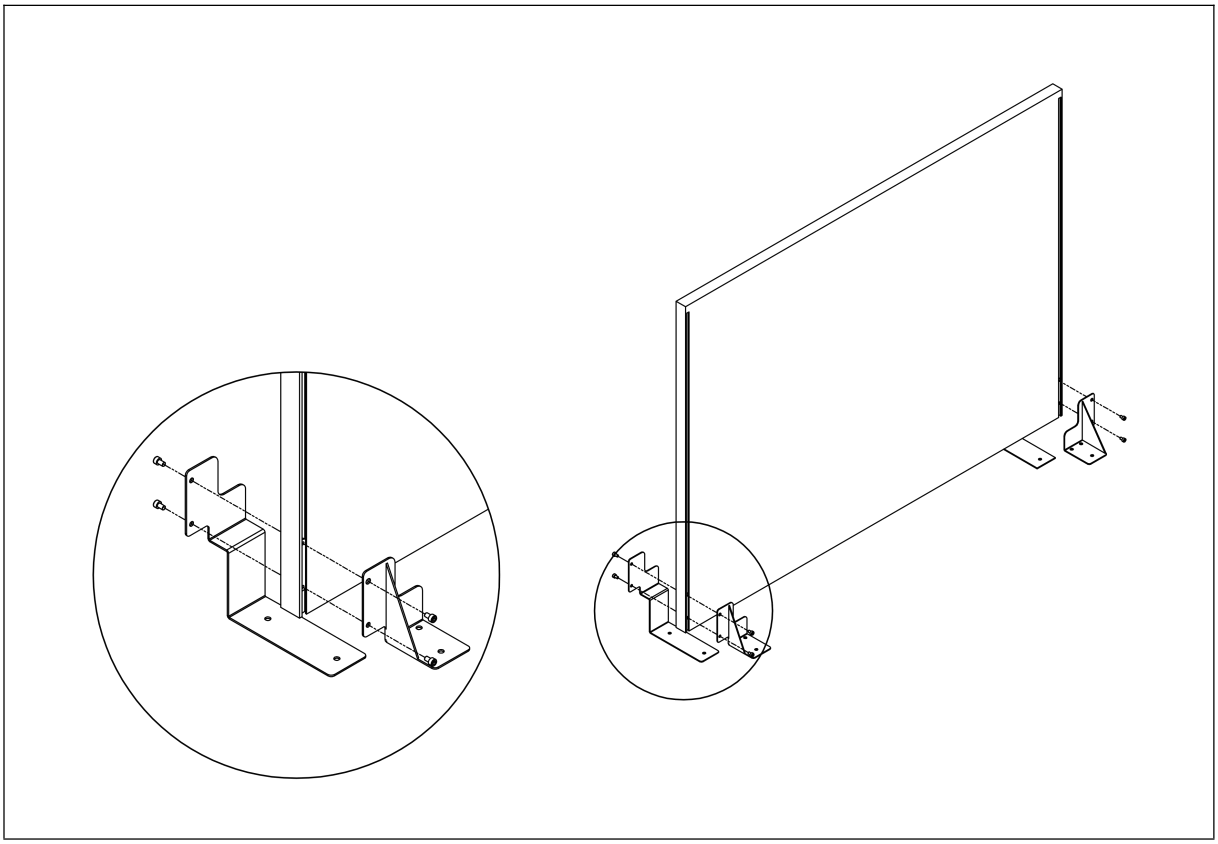

Step 3
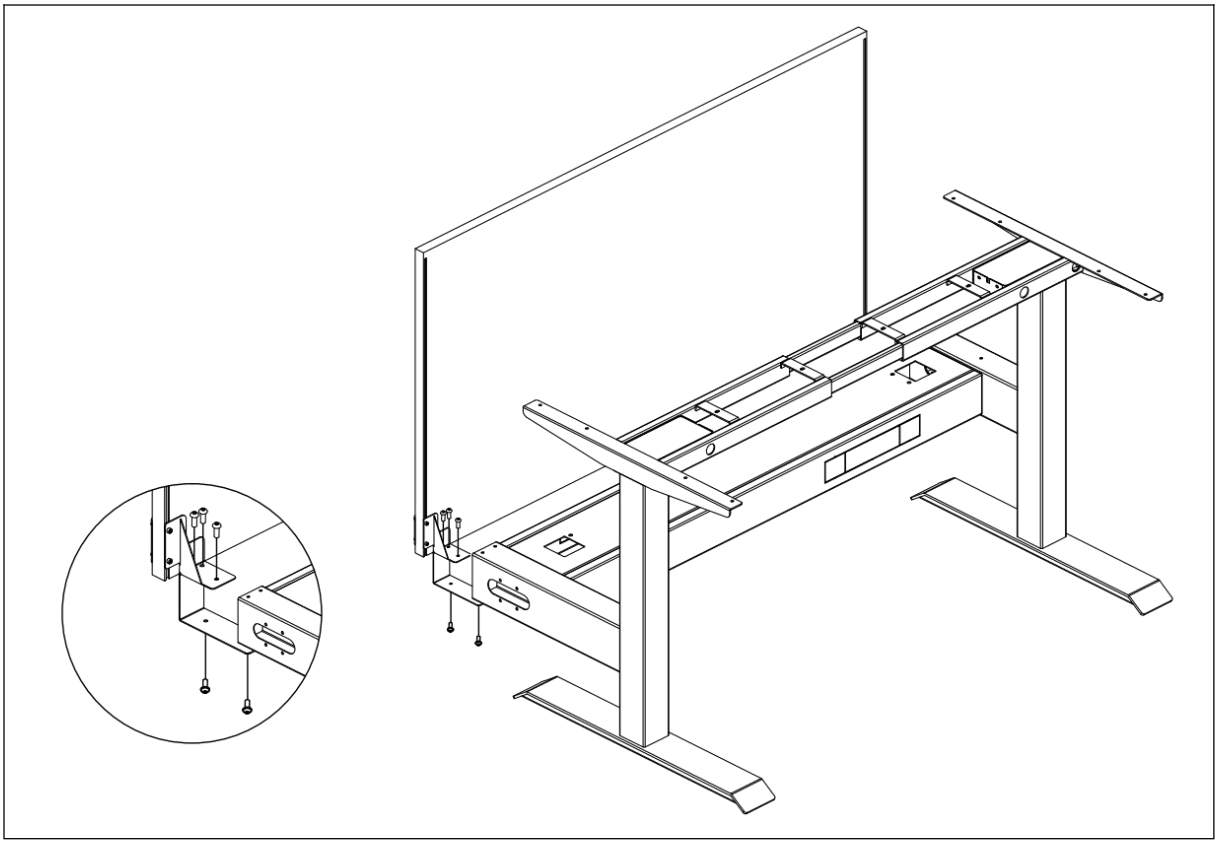
- Fix the panel to the desk frame with 10 pcs M6x10 screws.