Assembly Instructions:

Product Code : ERGO TASK
Product Name: Errgo Mesh Back Chair

Time Required:

15 minutes

Tools Required:

Screwdriver, Electric Drill, Pencil, Measuring tape/Ruler
*Tools are not included.

Skill Required:

Easy ●●●○○ Hard

The Assembly Skill Rating is a 5-point system that shows the degree of effort needed in assembling a specific product.
With 1 being easy for the average person and 5 requiring an expert. For most products, two persons are recommended.

• As th s may be required.
• Nc ble or desk tops.
embling.
• If you are missing any harc e ensure you have the name of the item,

EFI Furniture
32 Lisa Place, Coolaroo VIC 3048
03 9302 3067
efifurniture.com.au
contact@efifurniture.com

• Please retain your receipt as proof of purchase to validate your warranty.
• Assemble on a clean, flat, smooth surface such as a rug or carpet to avoid parts from being scratched.
• Remove all wrapping materials, including staples and packing straps before you start to assemble
• Keep all hardware parts out of reach of children.

CAUTION

• Heavy product. Do not attempt to lift or move without help
• Do not tighten screws and bolts until completely assembled.
• Do not use this product unless all bolts and screws are firmly secured and tightened.

WARNING

• If parts are missing, broken, damaged or worn stop using the product until all repairs are made.
• Failure to follow these warnings could result in serious injury.

Backrest can be pulled up and down. Please raise the Backrest to the top position when you would like to adjust the backrest to the initial position.

The mechanism with multi-functions:
1.Pneumatic Seat Height Control
Seat height can be adjusted.
2.Seat Angle Control
Seat angle can be adjusted independently.
3.Back Angle Control
Back can be adjusted and locked at desired positions.
4.Back Height Adjustment
Chair back can be adjusted up and down by ratchet for various back height
5.Control of Seat Forward Tilt
Lock and release of forward tilt for intensive keyboard activities.
6.Adjustable Tilt- tension Control
Tension of seat & back tilt can be increased or decreased as desired.

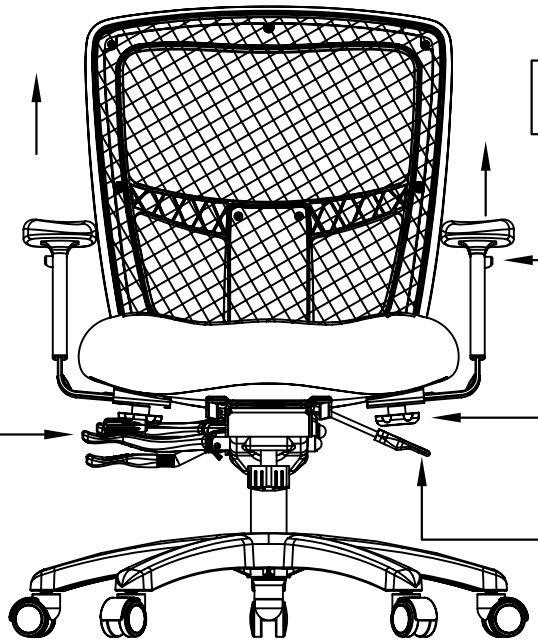

Press this button to adjust the up and down of the Armrest

The lock button can adjust the armrest width.

Seat Slider
Seat can slide back and forth by up to 2'' and lock of 4 positions.

ERGO TASK CHAIR

Item No	Description	Quantity	Picture
A	Back Assembly	1	
B	Seat Assembly	1	
C	Armrest L/R	1	
D	Gas Lift	1	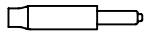
E	Base	1	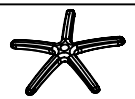
F	Caster	5	
G	the Adjusted width button	2	
H	Inner-hexagon screws 5/16″*3/4″	3	
I	Flat Pad 16*8.3*2.0 mm	3	
J	Wrench M5--25*64	1	
K	Dust Cover	1	

Note:

1. Remove the items from the carton, verify all pieces before assembly.
2. Beware the product surface, especially the painted and polish parts when assembly.
3. The assembled part of the gas lift is non-metal, beware not to beat it with hard object.

1. Assembling the Base(E), Caster(F) and Gas Lift(D) and Dust Cover(K)

1) Insert five Casters (F) into Base (E), push hard until you feel or hear the Caster (F) snap into place. With Base (E) upright and Casters (F) on the floor, insert Gas Lift (D) into Base (E), then put the Dust Cover (K) on the Gas Lift (D).

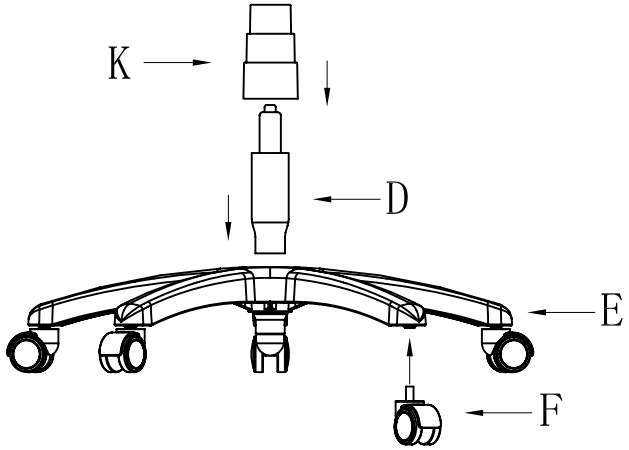

2. Assembling the Seat Assembly (B) and Back Assembly(A)

1) Keep the Seat Assembly(B) on a table plane first, Then insert Back Assembly(A) between connected Seat Assembly (B) and Seat Plate. Turn Back Assembly(A) right side up and insert Seat Assembly (B) into the center of three holes. Attach using Allen Wrench (J), fully tighten Hex Socket Screws (H) and Flat Pad (I).

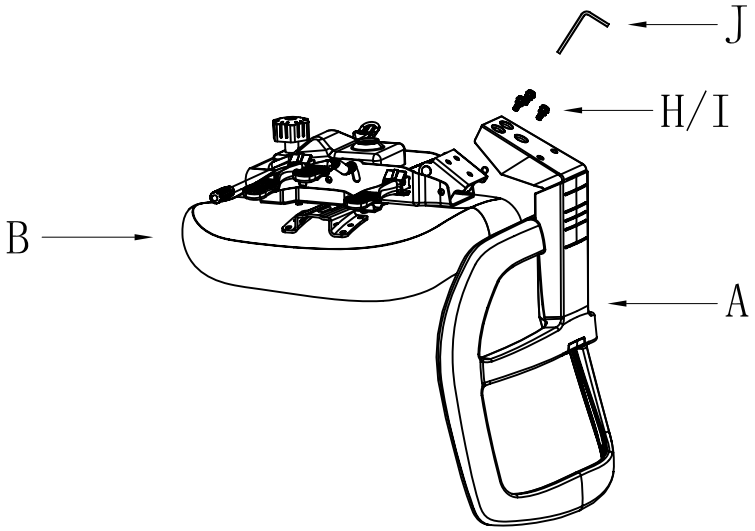

3.Assembling the Armrest (C) and Seat Assembly(B)

1)Attach Armrests (C) to Seat Assembly (B), using the adjusted width button (G) to fasten the Armrests(C) over the Seat Assembly (B).

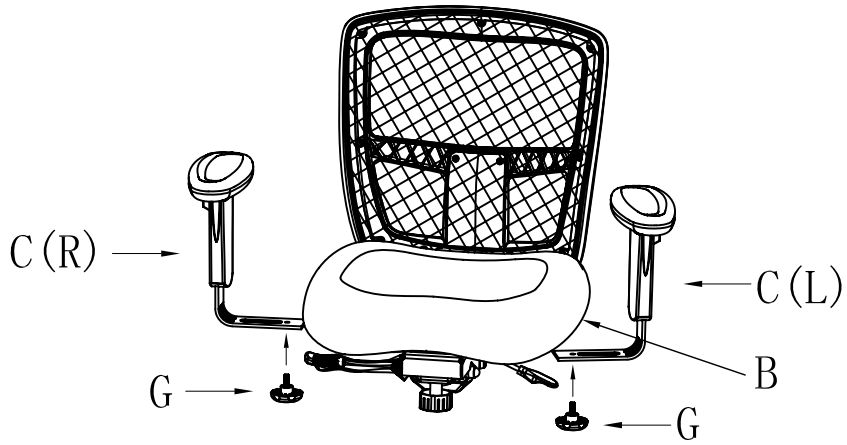

4.Assembling the Seat Assembly(B) and Gas Lift (D)
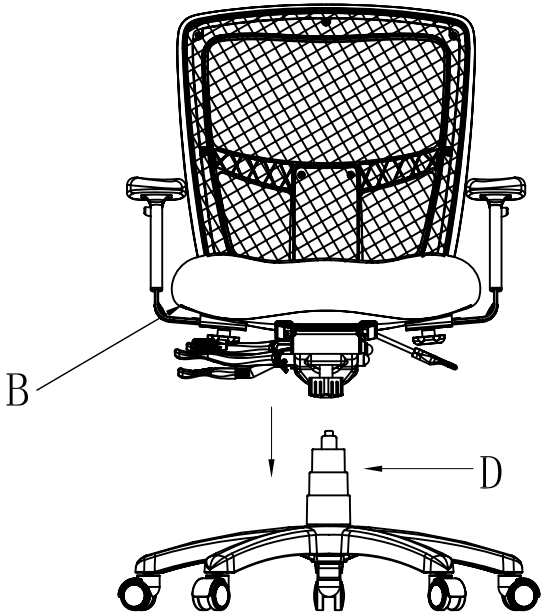
1).Insert the Seat Assembly (B) with the armrests into the Gas Lift (D).