Assembly Instructions

MODEL NO: ECF185-RIG

*For cabinet on right hand side of workstation

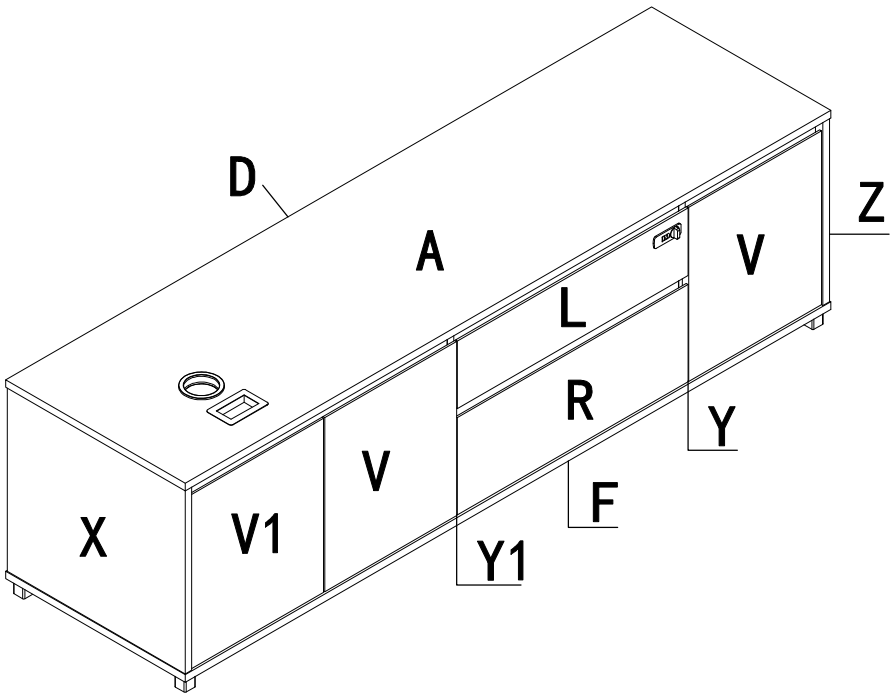

Pin 6×35 — 1 — 35PCS	Hinge(half-overlay) — 5 — 2PCS	Cable Cover — 9 — 1PCS
Cam — 2 — 35PCS	Hinge(inset) — 6 — 4PCS	Cable Cover Ø76 — 10 — 2PCS
Cam Cover — 3 — 35PCS	Metal Feet 40H — 7 — 5PCS	130×108×30 — 11 — 2PCS
Shelf Pin — 4 — 4PCS	Wood Screw 4×16 — 8 — 67PCS	Allen Wrench M3 — 12 — 1PCS
	Wood Screw 4×35 — 14 — 1PCS	118×116×30 — 13 — 2PCS

Cable Cover Must Be Removed Before Installing Height Adjustable Column Through Top Of Unit

1

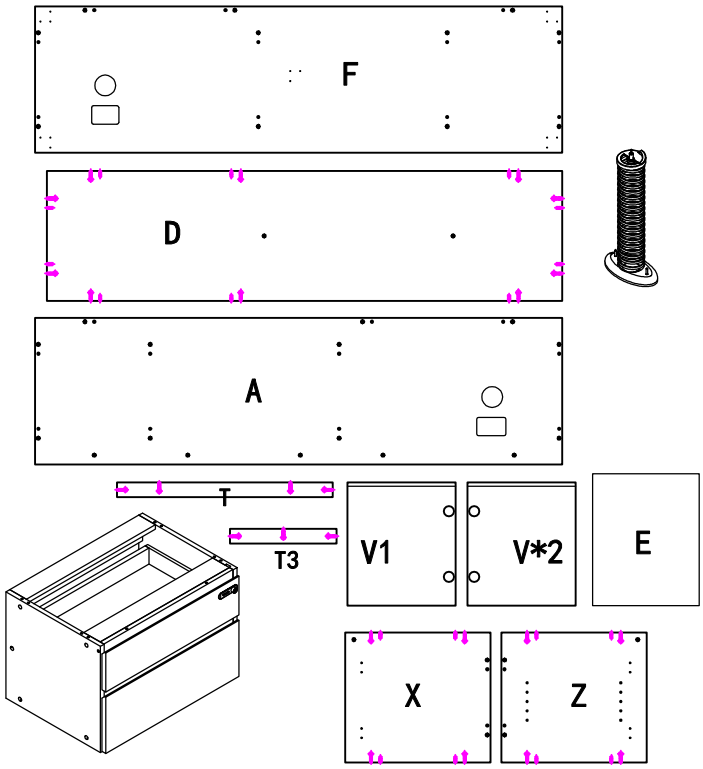

2

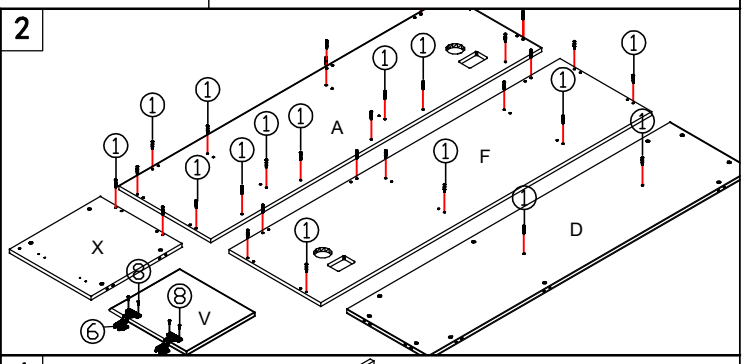

4

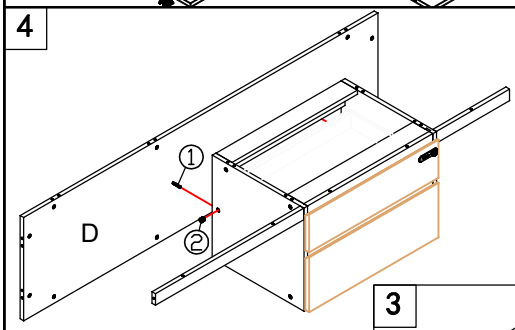

First insert the pin(part#1), then place the cam(part#2), and finally tighten/lock off after they have been put into the melamine.

3

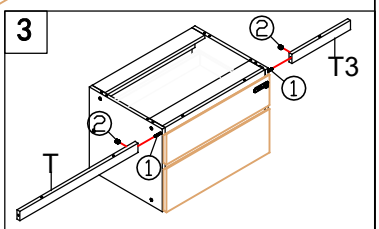

IMPORTANT NOTE:

- Place all laminated parts on a clean and smooth surface such as a rug or carpet to avoid the parts from being scratched.
- Check to be sure that you have all parts and hardware.
- Remove all wrapping materials,including staples & packing straps before you start to assemble.
- Don't tighten all screws/bolts until all completely assembled.
- Keep all hardware parts out of reach of children

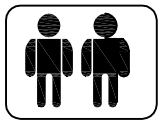

Assembly Instructions

*For cabinet on right hand side of workstation

MODEL NO: ECF185-RIG

5

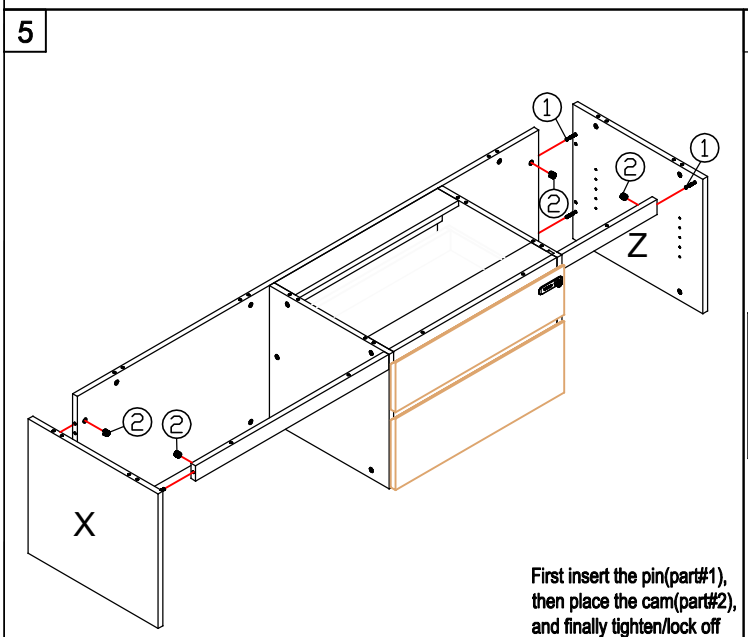

First insert the pin(part#1), then place the cam(part#2), and finally tighten/lock off after they have been put into the melamine.

6

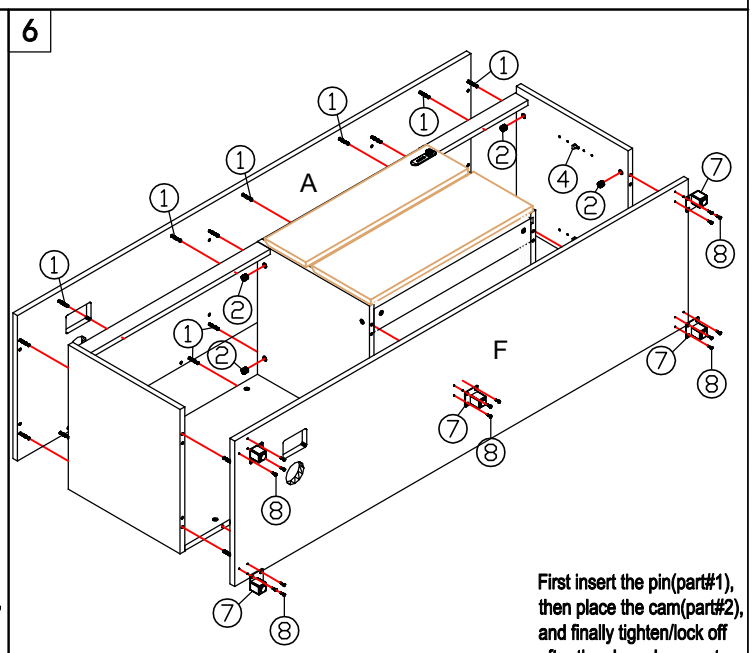

First insert the pin(part#1), then place the cam(part#2), and finally tighten/lock off after they have been put into the melamine.

7

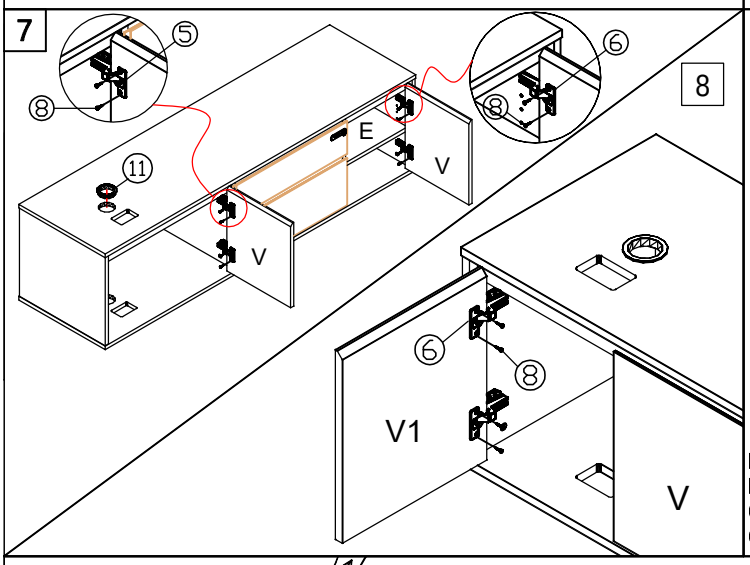

8

9

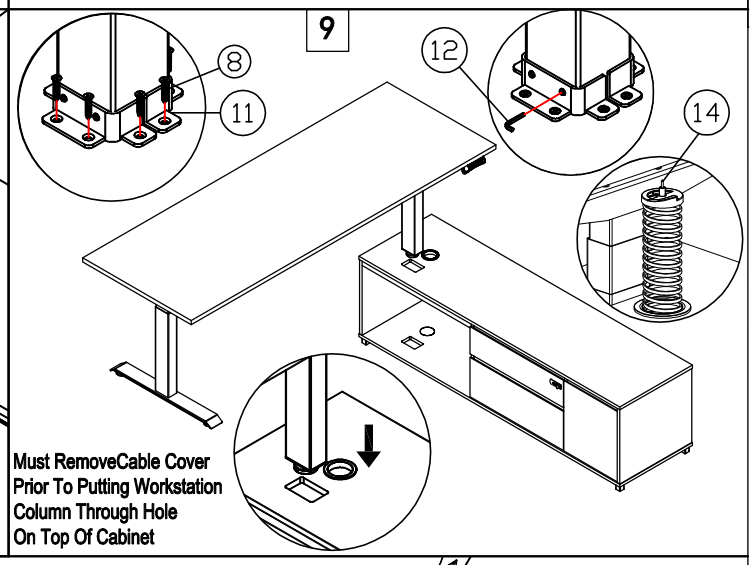

Must RemoveCable Cover Prior To Putting Workstation Column Through Hole On Top Of Cabinet

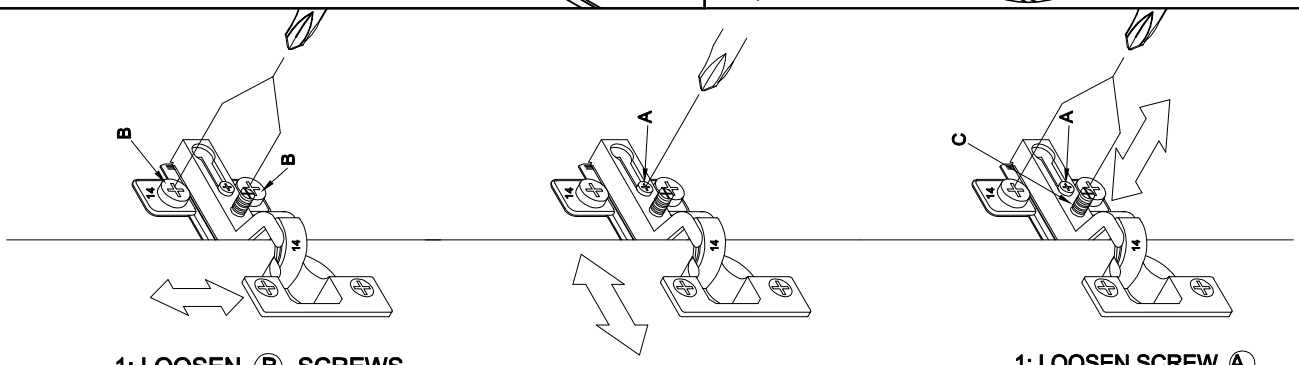

1: LOOSEN (B) SCREWS
2: ADJUST DOOR VERTICAL
3: TIGHTEN (B) SCREWS AGAIN

1: LOOSEN SCREW (A)
2: ADJUST DOOR IN DEPTH
3: TIGHTEN SCREW (A) AGAIN

1: LOOSEN SCREW (A)
2: ADJUST DOOR SIDEWAYS WITH SCREW (C)
3: TIGHTEN SCREW (A) AGAIN

IMPORTANT NOTE:

- Place all laminated parts on a clean and smooth surface such as a rug or carpet to avoid the parts from being scratched.
- Check to be sure that you have all parts and hardware.
- Remove all wrapping materials,including staples & packing straps before you start to assemble.
- Don't tighten all screws/bolts until all completely assembled.
- Keep all hardware parts out of reach of children

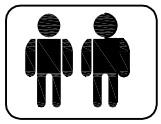

Assembly Instructions

MODEL NO: EC185-LEF

*For cabinet on left hand side of workstation

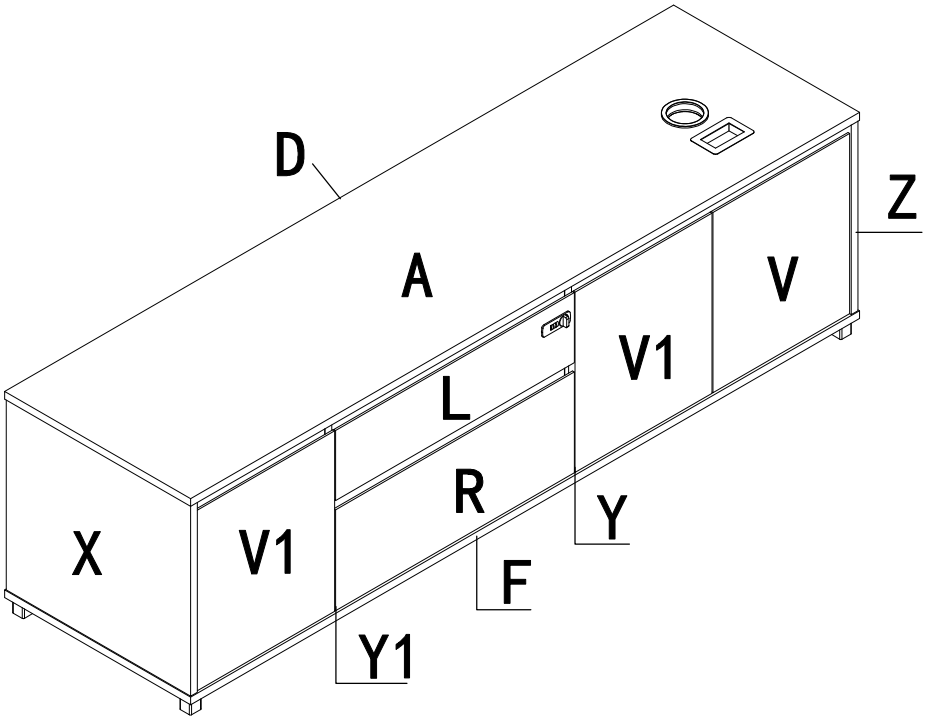

Pin 6×35 — 1 — 35PCS	Hinge(half-overlay) — 5 — 2PCS	Cable Cover — 9 — 1PCS
Cam — 2 — 35PCS	Hinge(inset) — 6 — 4PCS	Cable Cover Ø76 — 10 — 2PCS
Cam Cover — 3 — 35PCS	Metal Feet 40H — 7 — 5PCS	130×108×30 — 11 — 2PCS
Shelf Pin — 4 — 4PCS	Wood Screw 4×16 — 8 — 67PCS	Allen Wrench M3 — 12 — 1PCS
	Wood Screw 4×35 — 14 — 1PCS	118×116×30 — 13 — 2PCS

Cable Cover Must Be Removed Before Installing Height Adjustable Column Through Top Of Unit

1

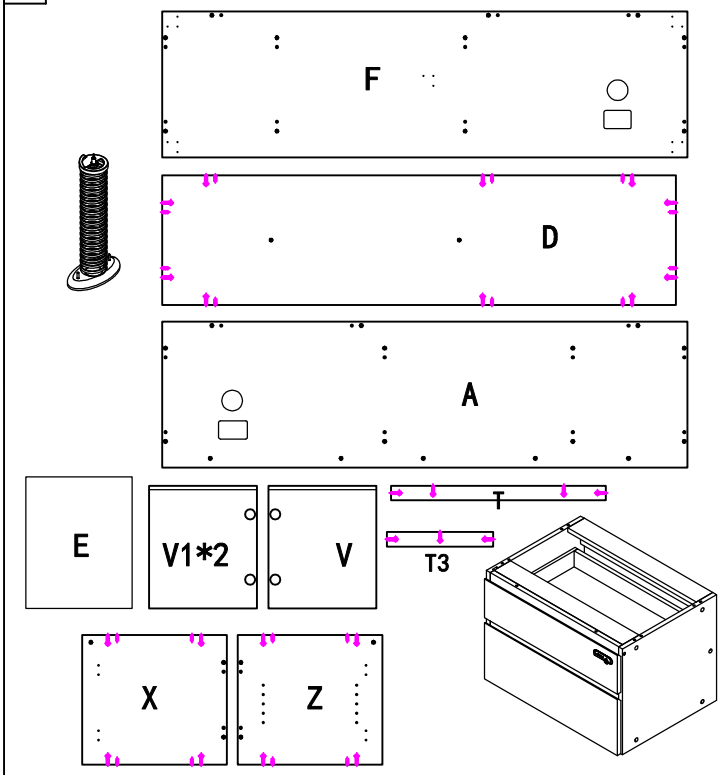

2

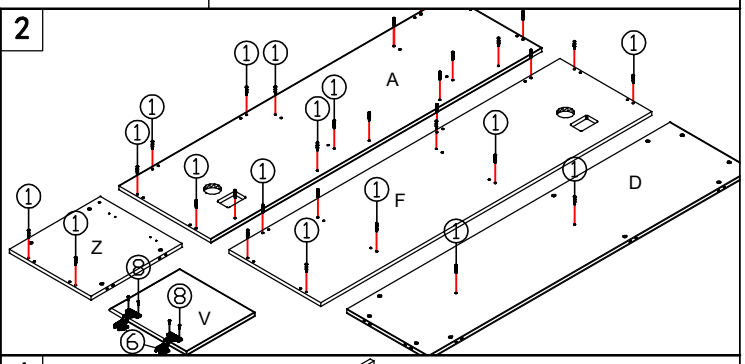

4

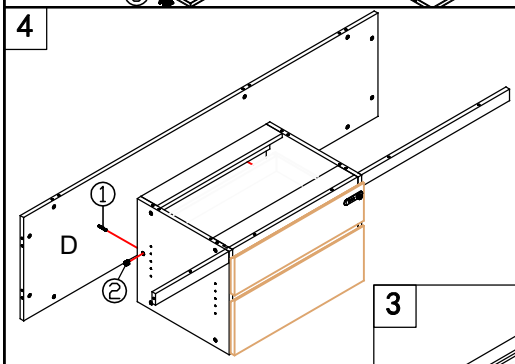

First insert the pin(part#1), then place the cam(part#2), and finally tighten/lock off after they have been put into the melamine.

3

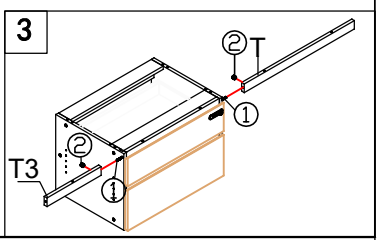

IMPORTANT NOTE:

- Place all laminated parts on a clean and smooth surface such as a rug or carpet to avoid the parts from being scratched.
- Check to be sure that you have all parts and hardware.
- Remove all wrapping materials,including staples & packing straps before you start to assemble.
- Don't tighten all screws/bolts until all completely assembled.
- Keep all hardware parts out of reach of children

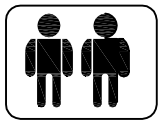

Assembly Instructions

*For cabinet on left hand side of workstation

MODEL NO:EC185-LEF

5

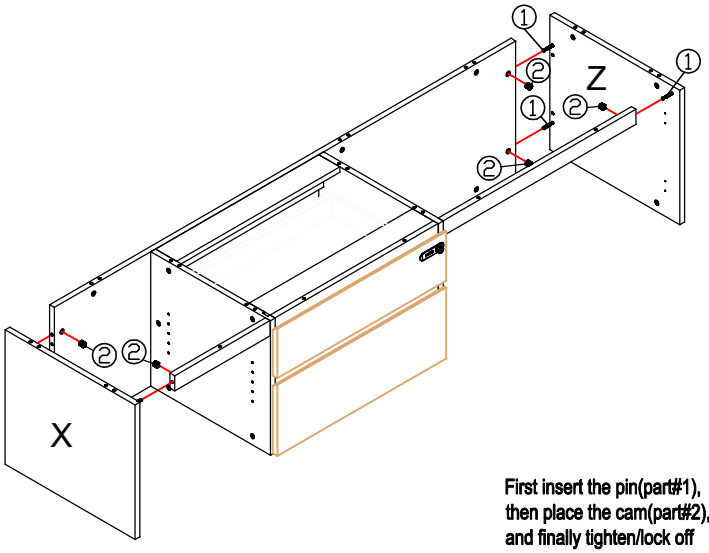

First insert the pin(part#1), then place the cam(part#2), and finally tighten/lock off after they have been put into the melamine.

6

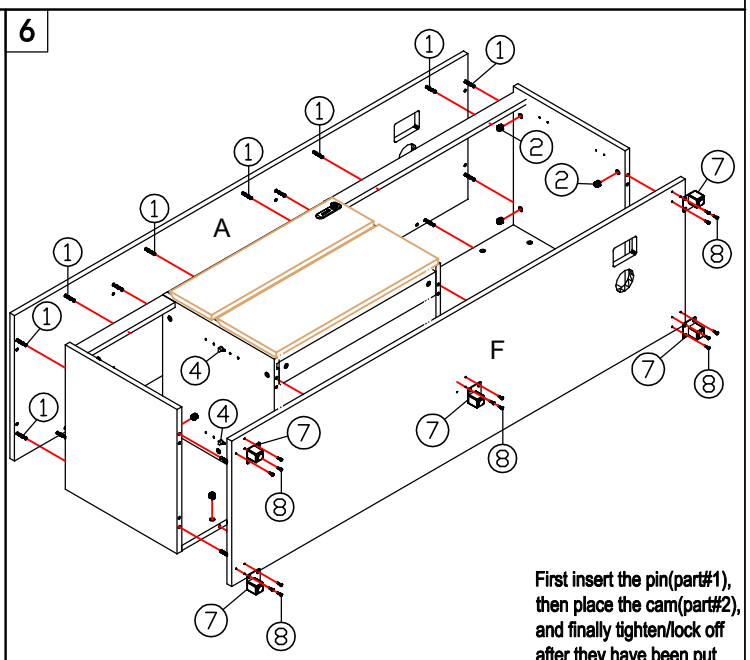

First insert the pin(part#1), then place the cam(part#2), and finally tighten/lock off after they have been put into the melamine.

7

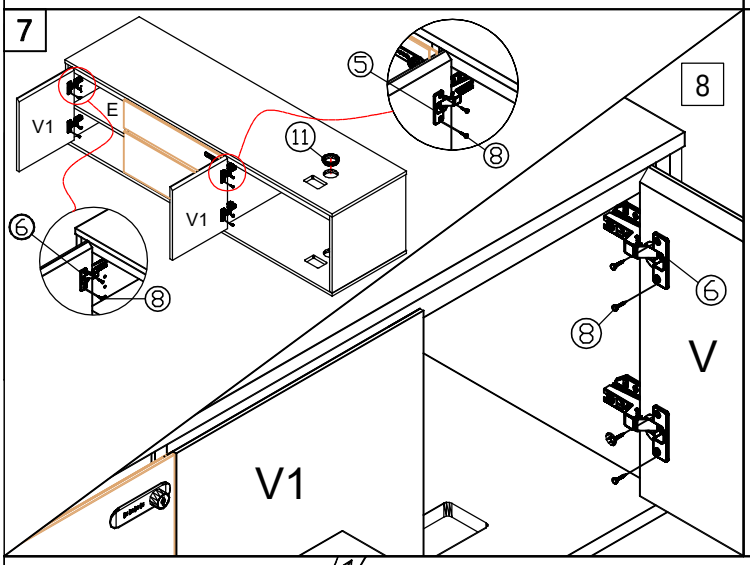

8

9

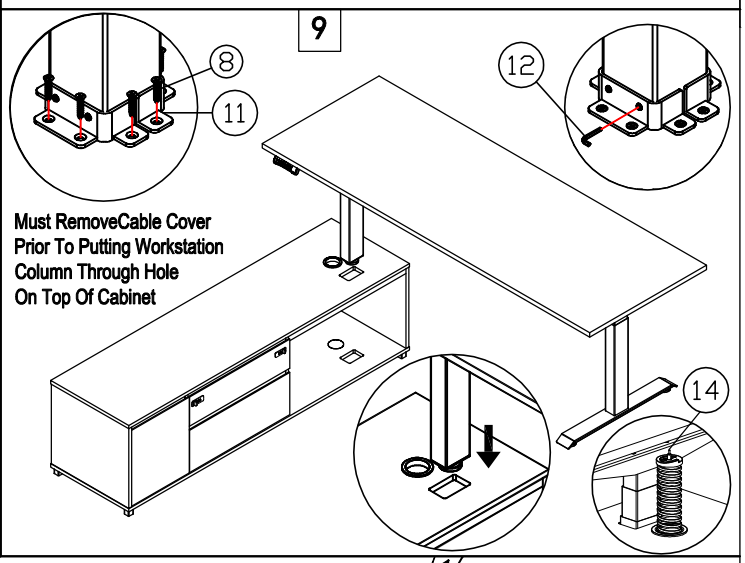

Must RemoveCable Cover Prior To Putting Workstation Column Through Hole On Top Of Cabinet

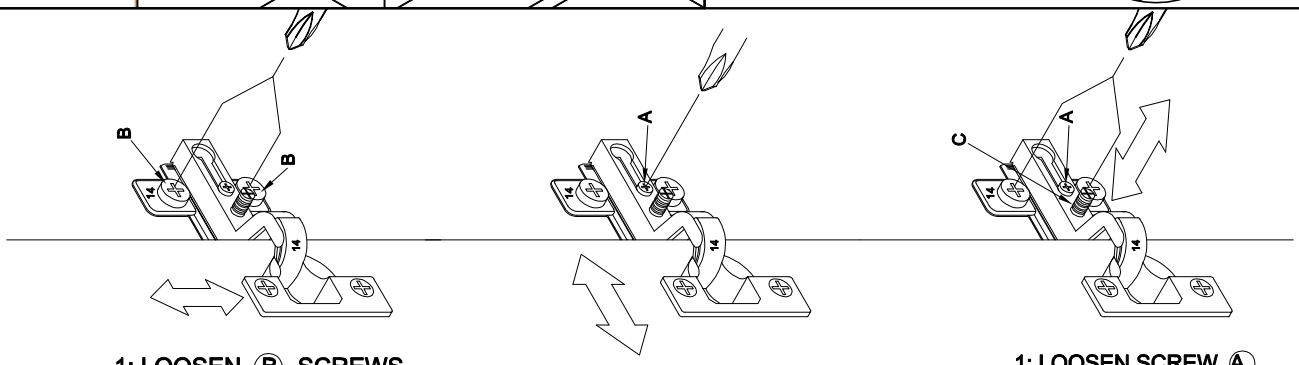

1: LOOSEN (B) SCREWS
2: ADJUST DOOR VERTICAL
3: TIGHTEN (B) SCREWS AGAIN

1: LOOSEN SCREW (A)
2: ADJUST DOOR IN DEPTH
3: TIGHTEN SCREW (A) AGAIN

1: LOOSEN SCREW (A)
2: ADJUST DOOR SIDEWAYS WITH SCREW (C)
3: TIGHTEN SCREW (A) AGAIN

IMPORTANT NOTE:

- Place all laminated parts on a clean and smooth surface such as a rug or carpet to avoid the parts from being scratched.
- Check to be sure that you have all parts and hardware.
- Remove all wrapping materials,including staples & packing straps before you start to assemble.
- Don't tighten all screws/bolts until all completely assembled.
- Keep all hardware parts out of reach of children

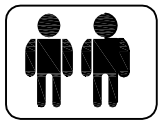

FOR COMBI-PUBLIC

No. 822

No. 822Z

No. 838Z

No. 824

No. 826

No. 828

No. 834

■ TO CHANGE THE SECRET CODE

1. THE PRESET FACTORY CODE IS 0-0-0-0. TO CHANGE THE SECRET CODE, ROTATE THE KNOB TO OPEN POSITION.

2. THE NEW SECRET CODE CAN BE RESET, E.G. 1-1-1-1.

■ TO LOCK

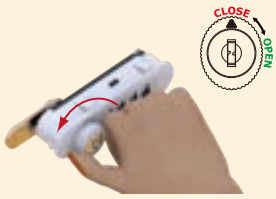

1. TURN THE DIALS TO THE SET CODE, E.G. 1-1-1-1 AND ROTATE THE KNOB TO CLOSE POSITION.

2. TURN THE DIALS TO ANY NUMBER, E.G. 2-2-2-2 FOR LOCKING.

■ TO UNLOCK

1. TURN THE DIALS TO THE PREVIOUSLY SET SECRET CODE, E.G. 1-1-1-1.

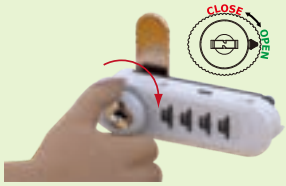

2. ROTATE THE KNOB TO OPEN POSITION.

■ TO RECOVER THE SECRET CODE WHEN THE LOCK IS IN CLOSE POSITION

1. INSERT THE KEY INTO THE KNOB AND TURN TO OPEN POSITION DIRECTION UNTIL STOP.

2. TURN EACH OF THE DIALS UNTIL IT CANNOT MOVE (ALL FOUR DIALS) TO RECOVER THE FORGOTTEN SECRET CODE.

3. TURN THE KEY TO CLOSE POSITION DIRECTION UNTIL STOP AND PULL THE KEY OUT. THE LOCK CAN NOW BE USED NORMALLY.

HOW TO SWITCH BETWEEN FUNCTIONS

■ FROM PRIVATE TO PUBLIC

1. THE LOCK IS IN OPEN POSITION.

2. SLIDE THE FUNCTION SWAP BUTTON TO PUBLIC TO CHANGE THE FUNCTION TO COMBI-PUBLIC.

FOR STEP 2, REMOVE THE CAM SHOULD IT OBSTRUCT THE SWAP BUTTON.

■ FROM PUBLIC TO PRIVATE

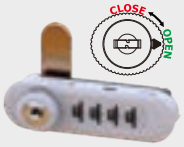

1. THE LOCK IS IN OPEN POSITION. THE SECRET CODE CAN BE RESET RIGHT AWAY E.G. 1-1-1-1.

2. ROTATE THE KNOB TO CLOSE POSITION.

3. SLIDE THE FUNCTION SWAP BUTTON TO PRIVATE.

4. ROTATE THE KNOB TO OPEN POSITION TO CHANGE THE FUNCTION TO COMBI-PRIVATE.

FOR STEP 3 REMOVE THE CAM SHOULD IT OBSTRUCT THE FUNCTION SWAP BUTTON.