Assembly Instructions:

Product Code : NCT1160
Product Name : Flow Reception Counter

Time Required:

45 minutes

Tools Required:

Screwdriver, Electric Drill, Pencil, Measuring tape/Ruler
*Tools are not included.

Skill Required:

Easy ● ● ● ● ● Hard

The Assembly Skill Rating is a 5-point system that shows the degree of effort needed in assembling a specific product. With 1 being easy for the average person and 5 requiring an expert.
For most products, two persons are recommended.

Please note, as this is a commercial product, some intermediate skills are required.
*No pre-drill holes or markings are provided on tops.

• As th s may be required.
• Nc ble or desk tops.
embling.
• If you are missing any harc e ensure you have the name of the item,

EFIFURNITURE
EFI Furniture
32 Lisa Place, Coolaroo VIC 3048
03 9302 3067
efifurniture.com.au
contact@efifurniture.com.au

• Please retain your receipt as proof of purchase to validate your warranty.
• Assemble on a clean, flat, smooth surface such as a rug or carpet to avoid parts from being scratched.
• Remove all wrapping materials, including staples and packing straps before you start to assemble
• Keep all hardware parts out of reach of children.

CAUTION

• Heavy product. Do not attempt to lift or move without help
• Do not tighten screws and bolts until completely assembled.
• Do not use this product unless all bolts and screws are firmly secured and tightened.

WARNING

• If parts are missing, broken, damaged or worn stop using the product until all repairs are made.
• Failure to follow these warnings could result in serious injury.

rapidline

ASSEMBLY INSTRUCTIONS

NCT1160

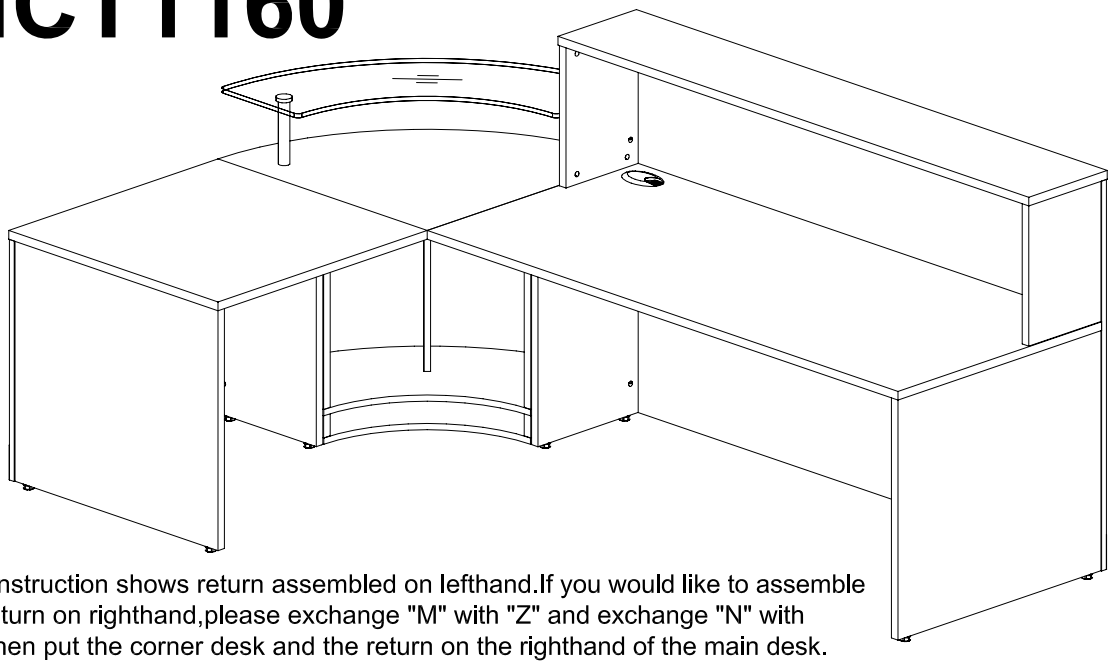

This instruction shows return assembled on lefthand.If you would like to assemble the return on righthand,please exchange "M" with "Z" and exchange "N" with "X".Then put the corner desk and the return on the righthand of the main desk.

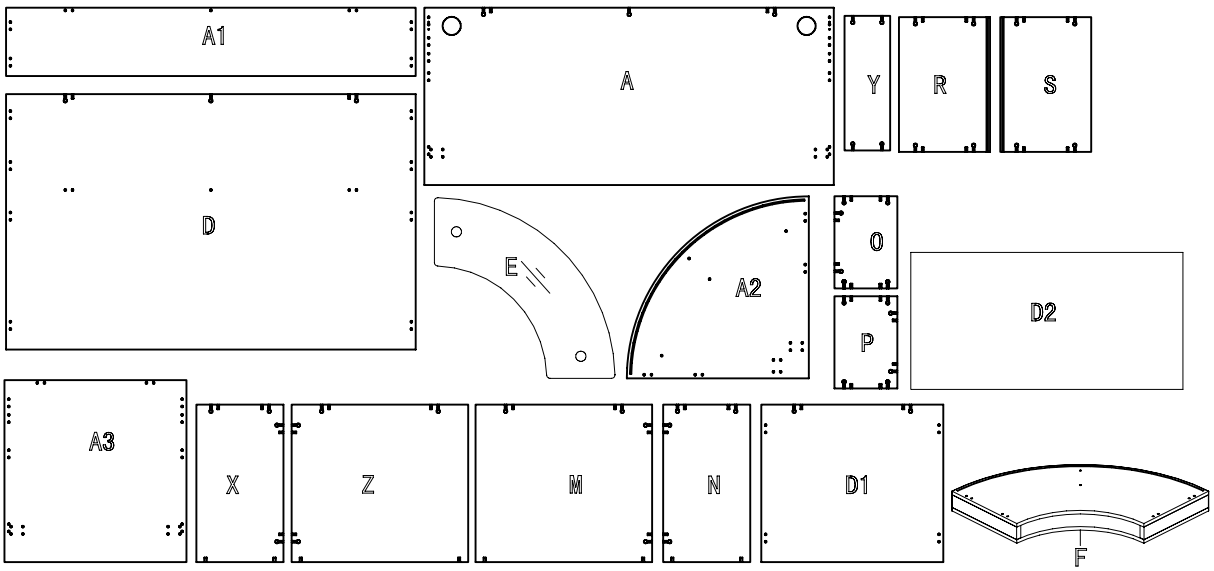

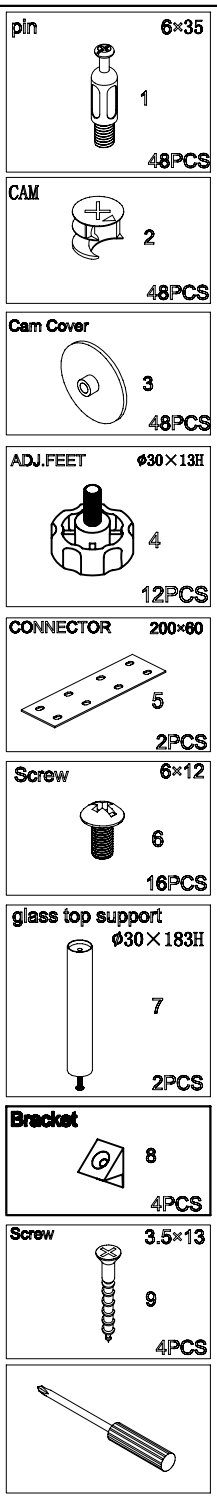

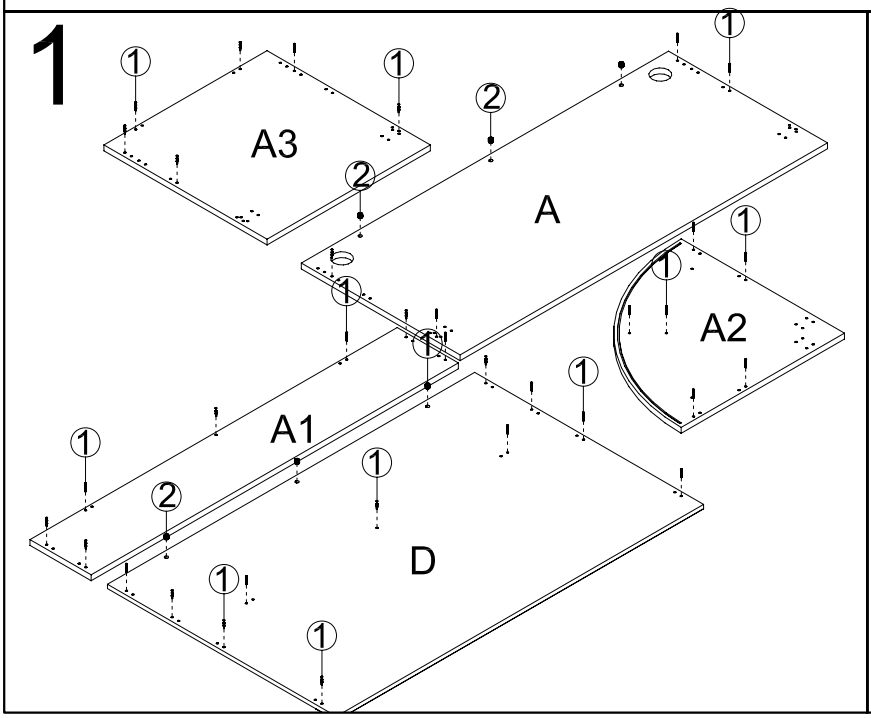

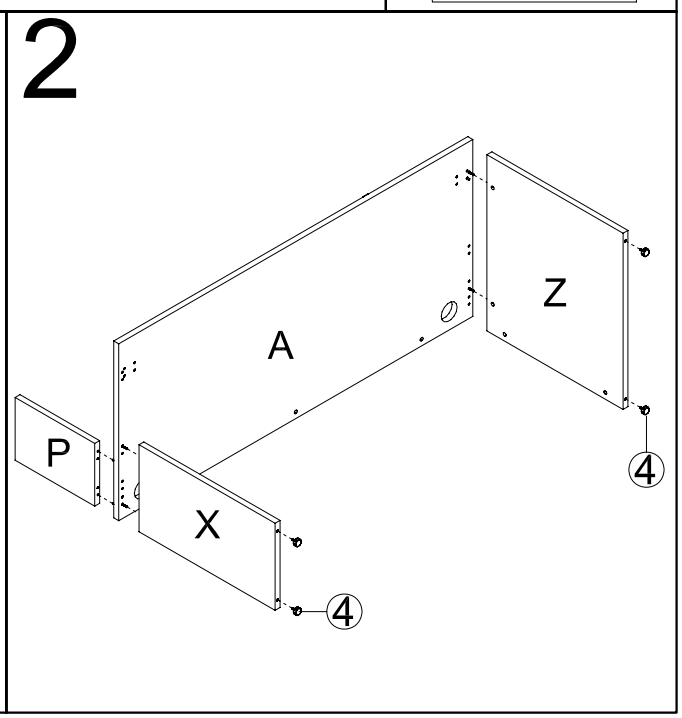

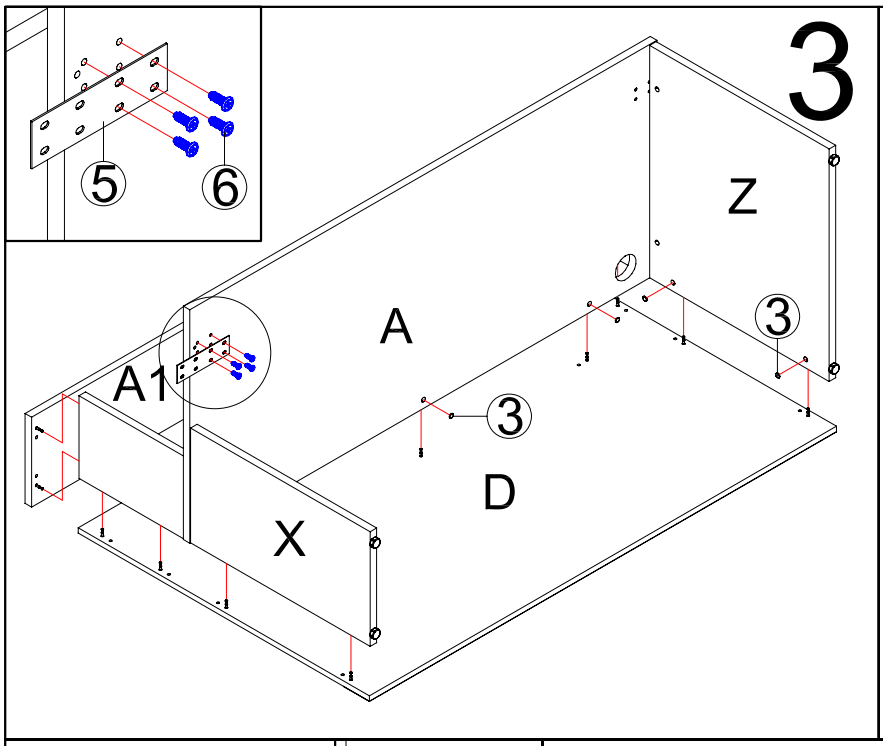
3
5
6
Z
A
A1
3
3
D
X

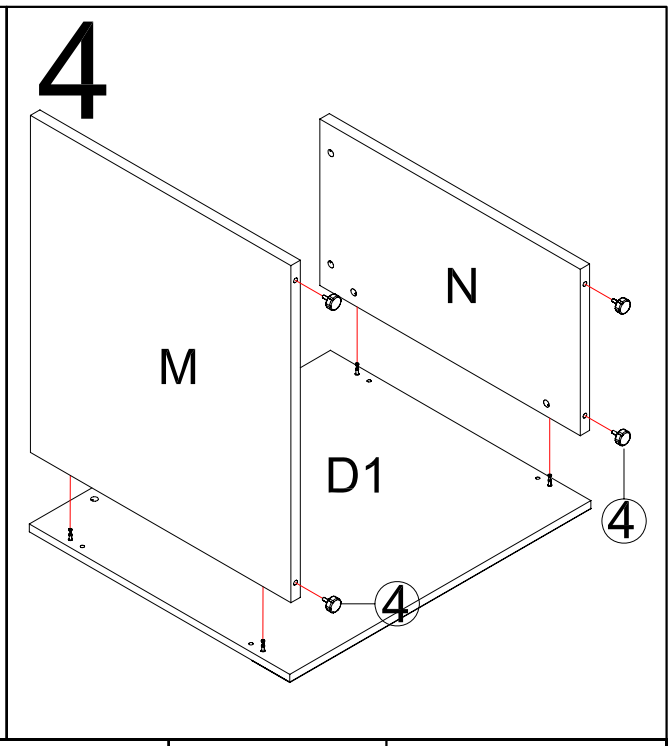
4
N
M
D1
4
4

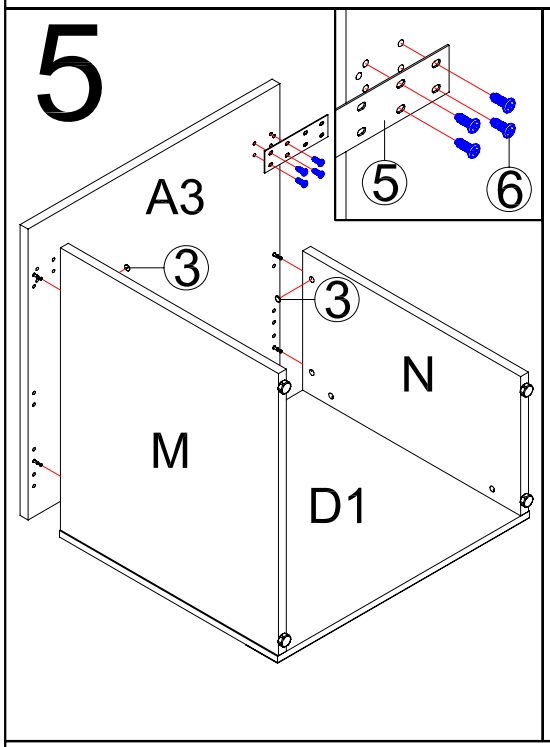
5
5
6
A3
3
3
N
M
D1

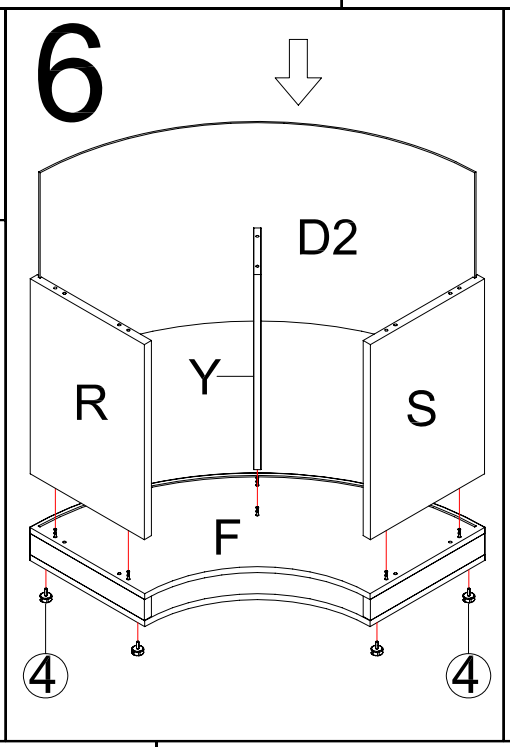
6
D2
R
Y
S
F
4
4

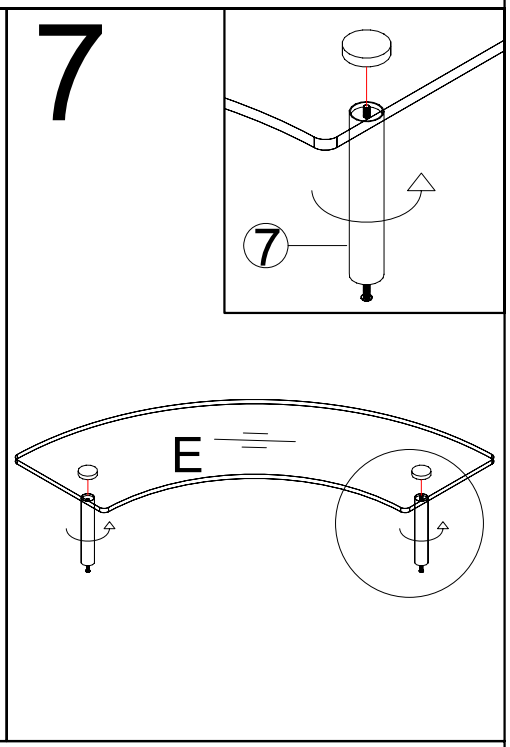
7
7
E

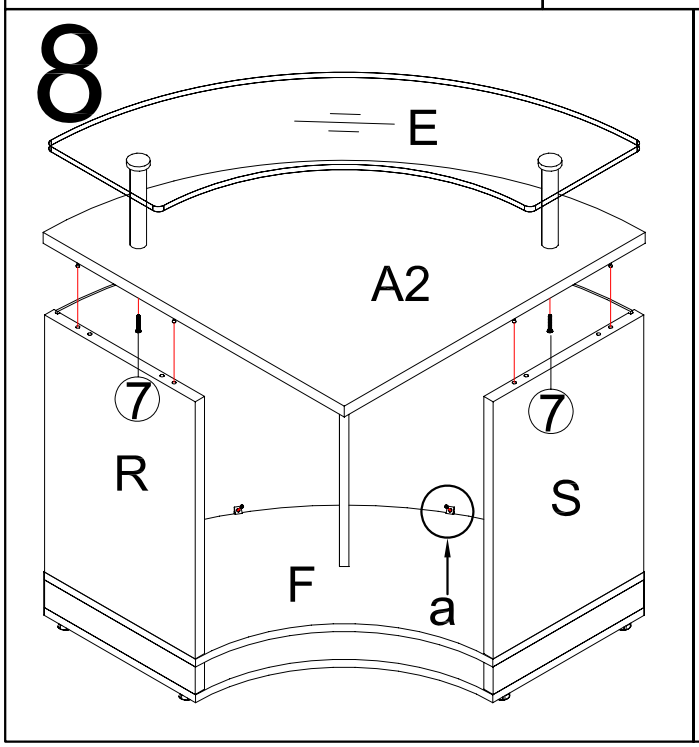
8
E
A2
7
7
R
S
F
a

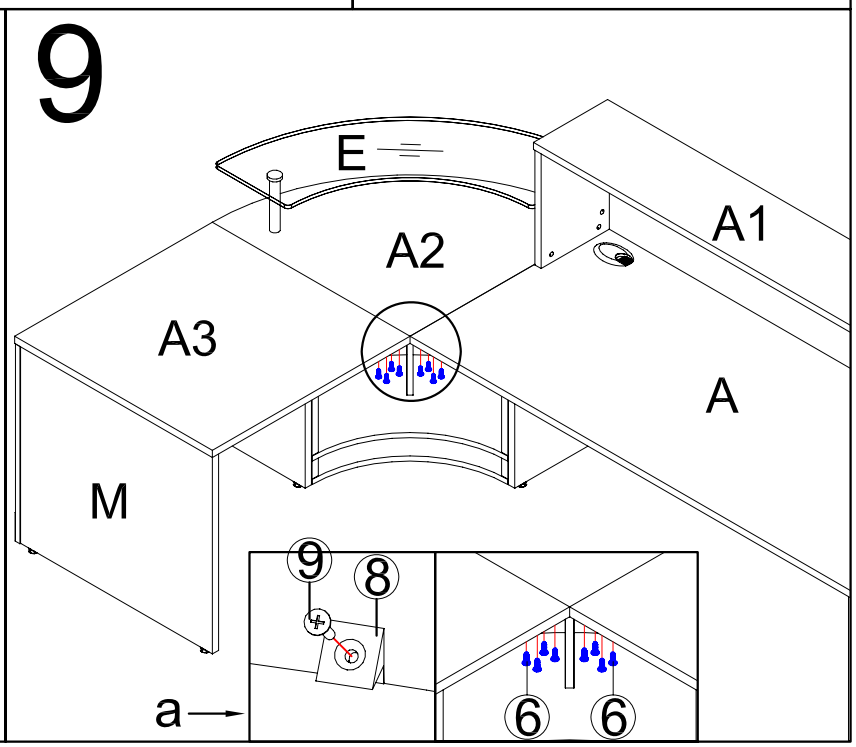
9
E
A1
A2
A3
A
M
9
8
a
6
6