Assembly Instructions:

Product Code : MERIDA HB BL
Product Name: MERIDA HB

Time Required:

15 minutes

Tools Required:

Screwdriver, Electric Drill, Pencil, Measuring tape/Ruler
*Tools are not included.

Skill Required:

Easy ●●●○○ Hard

The Assembly Skill Rating is a 5-point system that shows the degree of effort needed in assembling a specific product. With 1 being easy for the average person and 5 requiring an expert.
For most products, two persons are recommended.

Please note, as this is a commercial product, some intermediate skills are required.
*No pre-drill holes or markings are provided on tops.

• As th s may be required.
• Nc ble or desk tops.
embling.
• If you are missing any harc e ensure you have the name of the item,

EFI Furniture
32 Lisa Place, Coolaroo VIC 3048
03 9302 3067
efifurniture.com.au
contact@efifurniture.com

• Please retain your receipt as proof of purchase to validate your warranty.
• Assemble on a clean, flat, smooth surface such as a rug or carpet to avoid parts from being scratched.
• Remove all wrapping materials, including staples and packing straps before you start to assemble
• Keep all hardware parts out of reach of children.

CAUTION

• Heavy product. Do not attempt to lift or move without help
• Do not tighten screws and bolts until completely assembled.
• Do not use this product unless all bolts and screws are firmly secured and tightened.

WARNING

• If parts are missing, broken, damaged or worn stop using the product until all repairs are made.
• Failure to follow these warnings could result in serious injury.

ASSEMBLY INSTRUCTIONS

Remove all items from the carton. Verify all pieces before assembly.

PARTS LIST

TORQUE SETTINGS TO FIX ALL BOLTS: 1.6Nm

KEY	QTY	DESCRIPTION	KEY	QTY	DESCRIPTION	KEY	QTY	DESCRIPTION
1	5	Caster	6	1	Backrest Post	11	1	Back Tight Bolt
2	1	Base	7	4	Backrest Post Screw	12	1	Back Post Bellow
3	1	Seat Post	8	1	Seat	13	2	Back Post Bellow Screw
4	1	Seat Post Cover	9	1	Mechanism	14	1	M5 Size Allen Wrench
5	1	Backrest	10	6	Mechanism Screw	15	1	17mm Wrench

STEP 1.

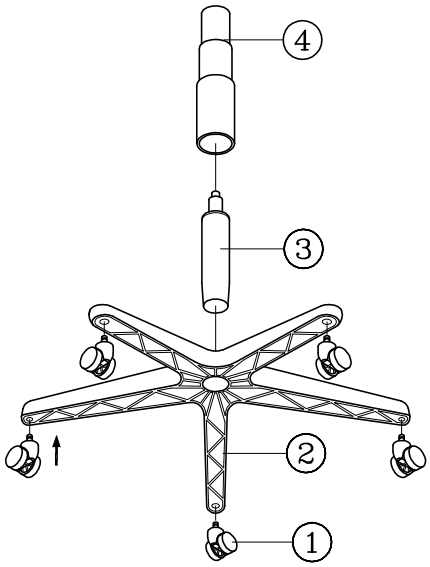

STEP 2.

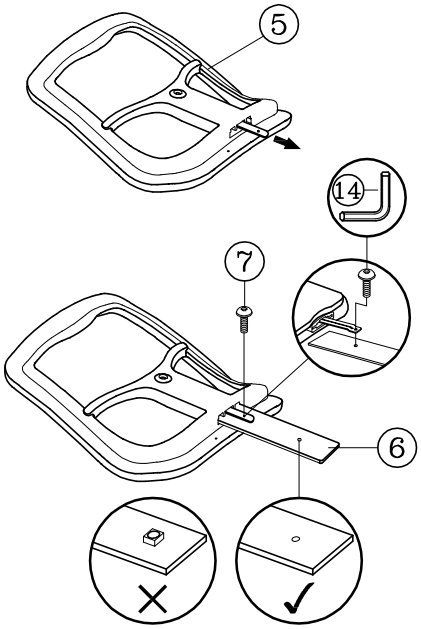

STEP 3.

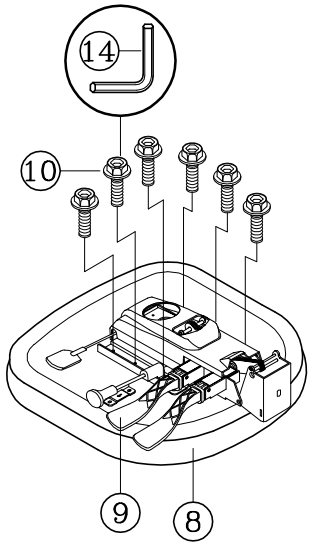

STEP 4.

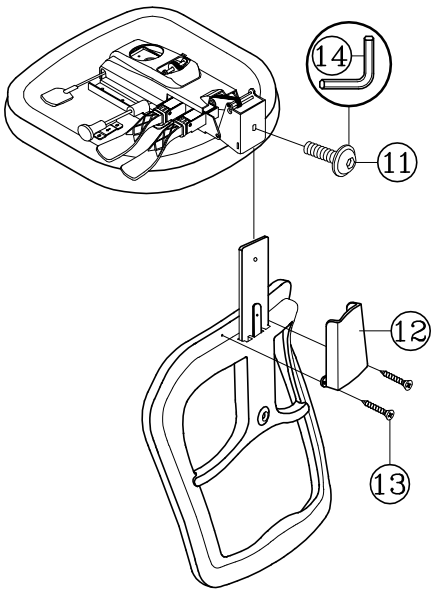

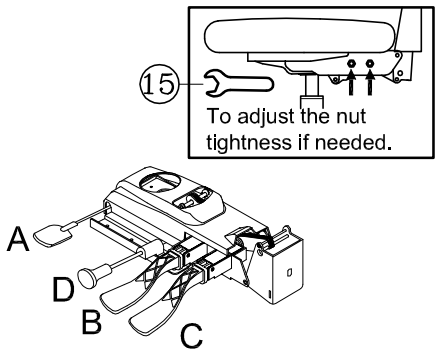

MECHANISM INSTRUCTIONS:

A Pneumatic seat height adjustment

B Seat angle adjustment :
Seat angle adjusts independently with a single lever.

C Backrest angle adjustment :
Back angle adjusts independently with a single lever.

D Sliding seat:
It provides seat depth adjustment for different user leg lengths.

PREVENTIVE MAINTENANCE AND WARNING!

- USE THIS PRODUCT ONLY FOR SEATING ONE PERSON AT A TIME.
- DO NOT USE THIS CHAIR AS A STEP STOOL / LADDER.
- DO NOT SIT ON ANY PART OF THE CHAIR EXCEPT THE SEAT.
- DO NOT USE CHAIR ON UNEVEN FLOOR SURFACES.
- DO NOT USE CHAIR UNLESS ALL BOLTS, SCREWS AND KNOBS ARE TIGHTENED.
- **EVERY SIX MONTHS, PLEASE MAKE SURE ALL BOLTS, SCREWS AND KNOBS ARE FULLY TIGHTENED TO ENSURE STABILITY.**
- IF ANY PARTS ARE MISSING, BROKEN, DAMAGED OR WORN, STOP USE OF THE PRODUCT UNTIL REPAIRS ARE MADE USING FACTORY AUTHORIZED PARTS.
- DISPOSE OF PACKAGING PROPERLY. PLASTIC BAG IS NOT A TOY. DO NOT USE PLASTIC BAG AS HEAD COVERING - IT MAY CAUSE SUFFOCATION.
- FAILURE TO FOLLOW THESE WARNINGS COULD RESULT IN SERIOUS INJURY.
- NOTE:SOME SCREWS MAY BE PREASSEMBLED. IF PREASSEMBLED, IGNORE ASSEMBLY INSTRUCTIONS.

MERIDA H/B / MILAN MESH MB