Assembly Instructions:

Product Code : PIX-ARMS | PIX5STAR | PIXSLED | PIXSTOOL
Product Name: PIXEL Chair range

Time Required:

20 minutes

Tools Required:

Screwdriver, Electric Drill, Pencil, Measuring tape/Ruler
*Tools are not included.

Skill Required:

Easy ● ○ ○ ○ ○ Hard

The Assembly Skill Rating is a 5-point system that shows the degree of effort needed in assembling a specific product. With 1 being easy for the average person and 5 requiring an expert.
For most products, two persons are recommended.

Please note, as this is a commercial product, some intermediate skills are required.
*No pre-drill holes or markings are provided on tops.

• As th s may be required.
• Nc ble or desk tops.
embling.
• If you are missing any harc e ensure you have the name of the item,

EFI Furniture
32 Lisa Place, Coolaroo VIC 3048
03 9302 3067
efifurniture.com.au
contact@efifurniture.com

• Please retain your receipt as proof of purchase to validate your warranty.
• Assemble on a clean, flat, smooth surface such as a rug or carpet to avoid parts from being scratched.
• Remove all wrapping materials, including staples and packing straps before you start to assemble
• Keep all hardware parts out of reach of children.

CAUTION

• Heavy product. Do not attempt to lift or move without help
• Do not tighten screws and bolts until completely assembled.
• Do not use this product unless all bolts and screws are firmly secured and tightened.

WARNING

• If parts are missing, broken, damaged or worn stop using the product until all repairs are made.
• Failure to follow these warnings could result in serious injury.

PIX5STAR

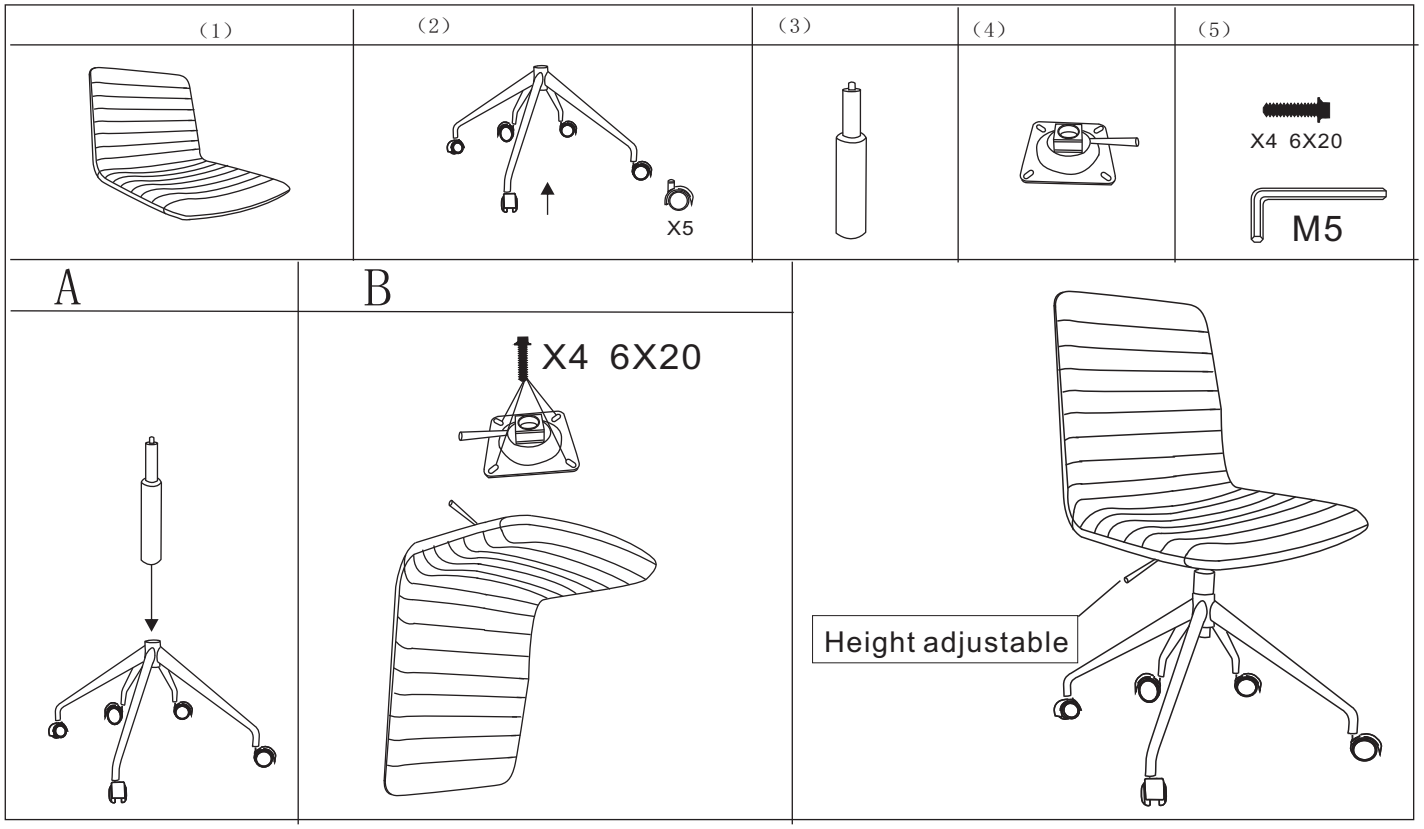

User Information

*Height adjustable: Lift lever

CHAIR CARE

*Clean regularly.
*Use leather cleaner where leather is applicable.
*Use wet towel where is applicable.
*Test on concealed area before proceeding

WARNING

*Do not use this chair unless all bolts/knob are tightened and this chair is assembled firmly and properly.

*This chair is for one person to sit on. Do not stand on the chair.

*Do not touch mechanism except lever handle/knob when people is sitting in.

*Only trained personel replace or repair cylinder.

*Failure to follow these warnings could result in serious injury.

rapidline

PIX-ARMS

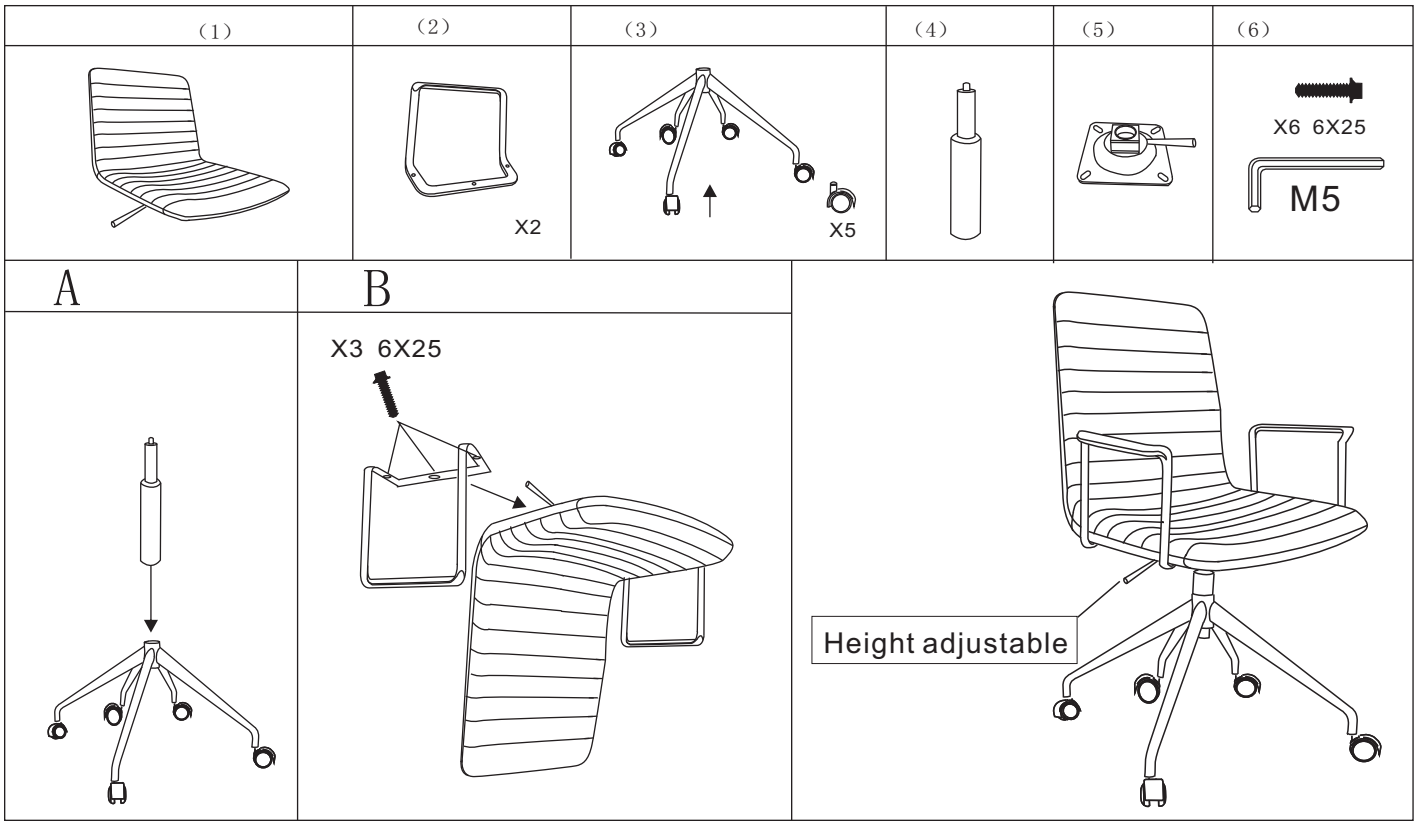

User Information

*Height adjustable: Lift lever

CHAIR CARE

*Clean regularly.
*Use leather cleaner where leather is applicable.
*Use wet towel where is applicable.
*Test on concealed area before proceeding

WARNING

*Do not use this chair unless all bolts/knob are tightened and this chair is assembled firmly and properly.

*This chair is for one person to sit on. Do not stand on the chair.

*Do not touch mechanism except lever handle/knob when people is sitting in.

*Only trained personel replace or repair cylinder.

*Failure to follow these warnings could result in serious injury.

rapidline

PIXSLED

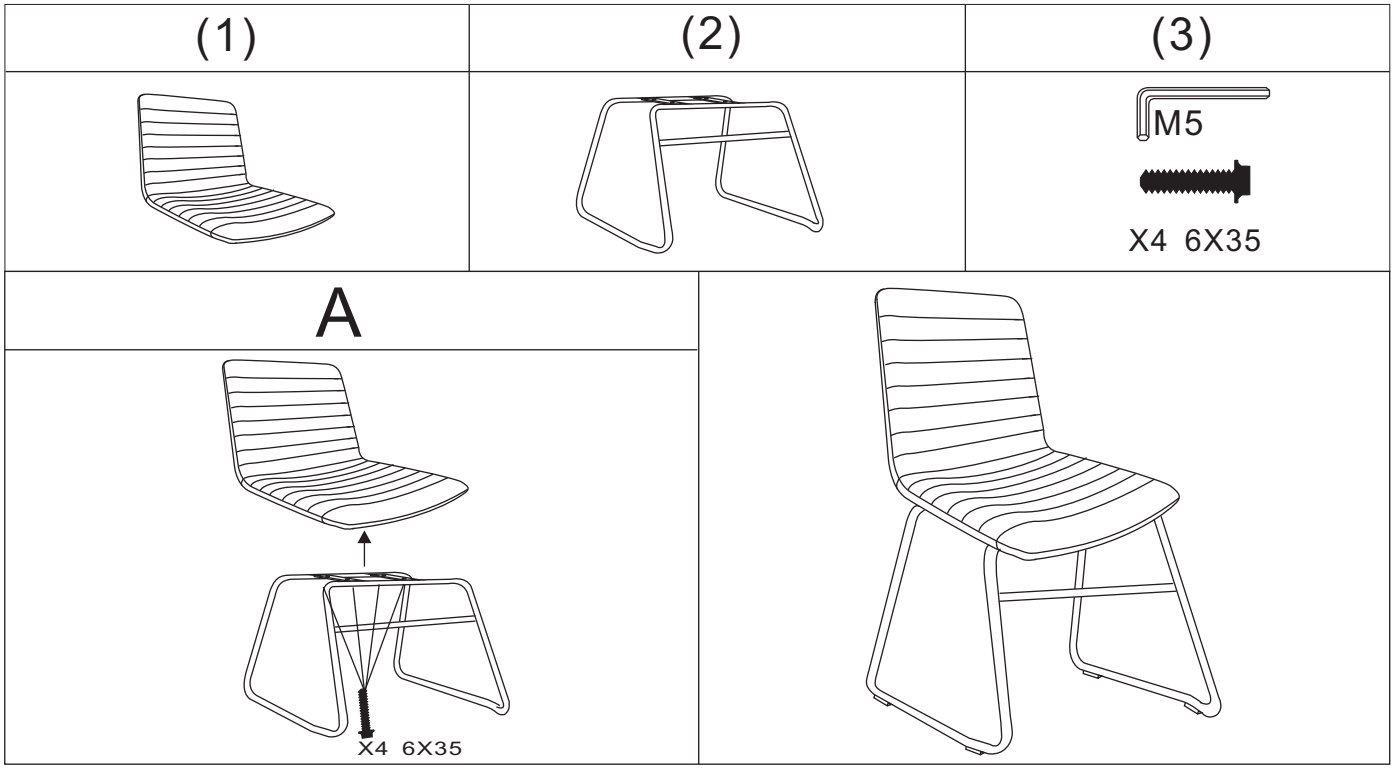

CHAIR CARE

*Clean regularly.
*Use leather cleaner where leather is applicable.
*Use wet towel where is applicable.
*Test on concealed area before proceeding

WARNING

*Do not use this chair unless all bolts/knob are tightened and this chair is assembled firmly and properly.
*This chair is for one person to sit on. Do not stand on the chair.
*Failure to follow these warnings could result in serious injury.

rapidline

PIXSTOOL

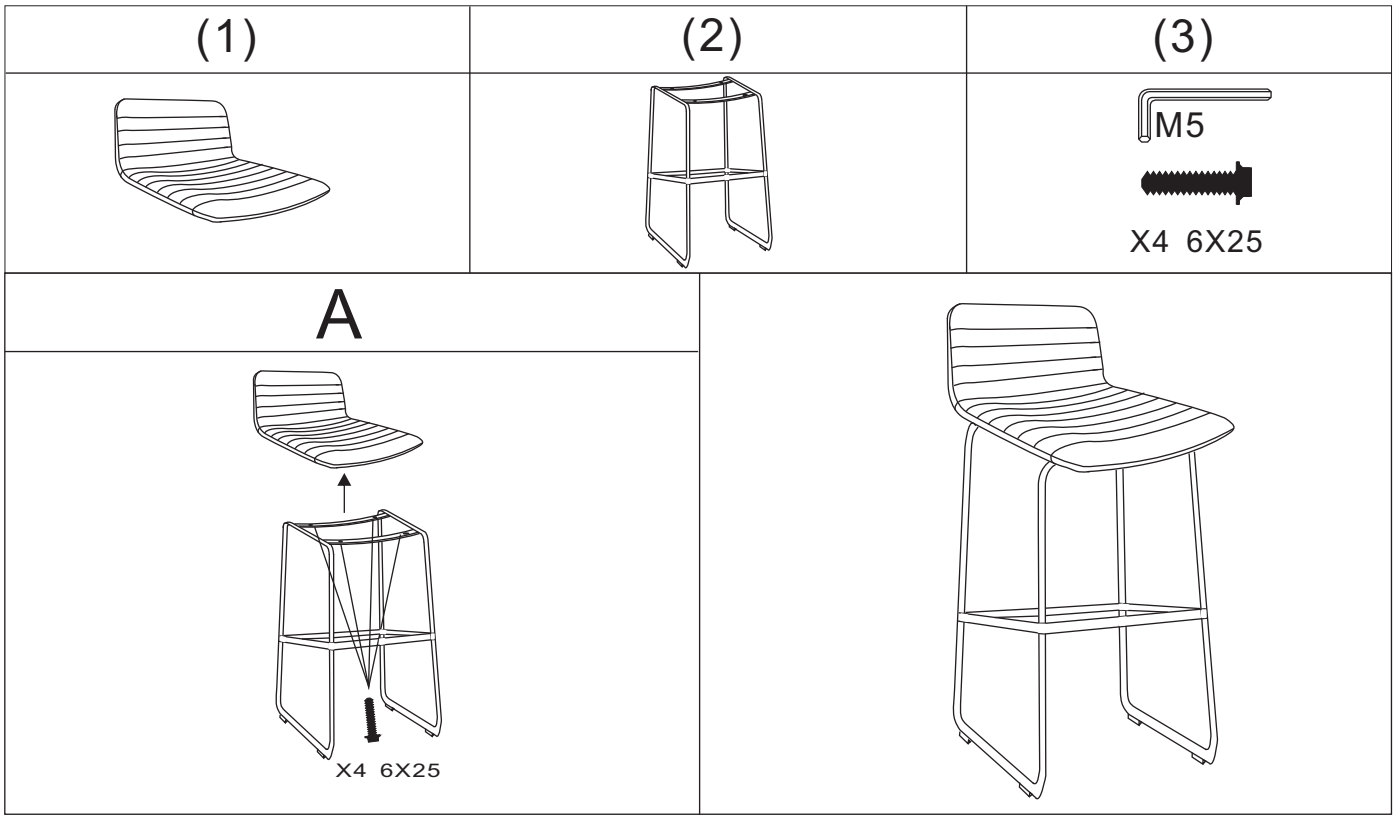

CHAIR CARE

*Clean regularly.
*Use leather cleaner where leather is applicable.
*Use wet towel where is applicable.
*Test on concealed area before proceeding

WARNING

*Do not use this chair unless all bolts/knob are tightened and this chair is assembled firmly and properly.

*This chair is for one person to sit on. Do not stand on the chair.

*Failure to follow these warnings could result in serious injury.

rapidline