Assembly Instructions:

Product Code : TTR900 / TTR1200 / TFR9
Product Name: Typhoon Round Table

Time Required:

20 minutes

Tools Required:

Screwdriver, Electric Drill, Pencil, Measuring tape/Ruler
*Tools are not included.

Skill Required:

Easy ●●●○○ Hard

The Assembly Skill Rating is a 5-point system that shows the degree of effort needed in assembling a specific product.
With 1 being easy for the average person and 5 requiring an expert. For most products, two persons are recommended.

• As th s may be required.
• Nc ble or desk tops.
embling.
• If you are missing any harc e ensure you have the name of the item,

EFI Furniture
32 Lisa Place, Coolaroo VIC 3048
03 9302 3067
efifurniture.com.au
contact@efifurniture.com

• Please retain your receipt as proof of purchase to validate your warranty.
• Assemble on a clean, flat, smooth surface such as a rug or carpet to avoid parts from being scratched.
• Remove all wrapping materials, including staples and packing straps before you start to assemble
• Keep all hardware parts out of reach of children.

CAUTION

• Heavy product. Do not attempt to lift or move without help
• Do not tighten screws and bolts until completely assembled.
• Do not use this product unless all bolts and screws are firmly secured and tightened.

WARNING

• If parts are missing, broken, damaged or worn stop using the product until all repairs are made.
• Failure to follow these warnings could result in serious injury.

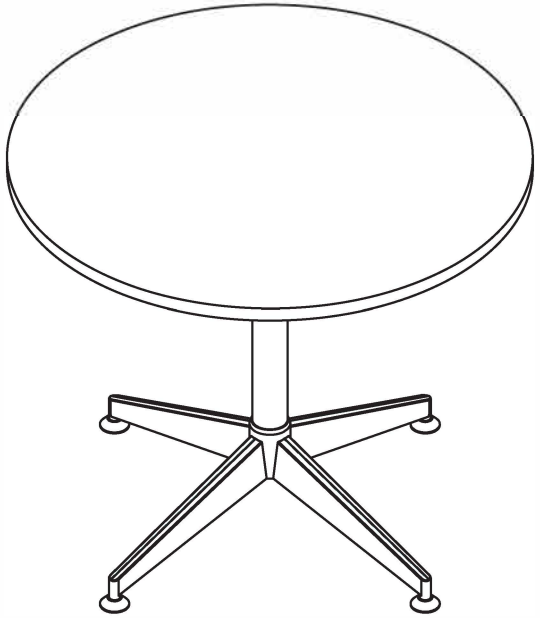

ASSEMBLY INSTRUCTIONS

	M12*16H 2pcs		M8*16H 2pcs
	Φ12*2H 2pcs		Φ8*2H 2pcs
	M5*20H 8pcs		M8 1pcs
	M12 1pcs		Φ16 1pcs

1

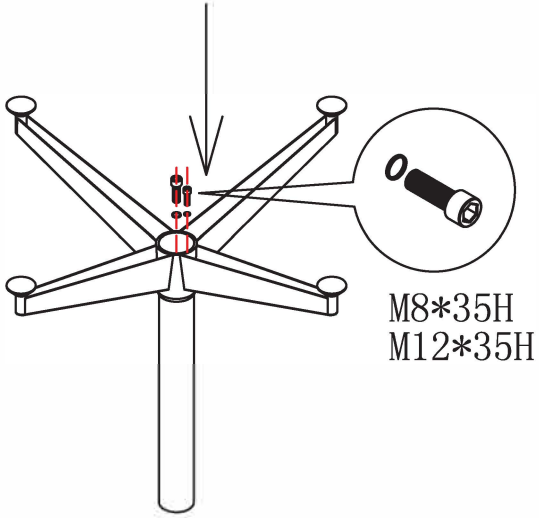

2

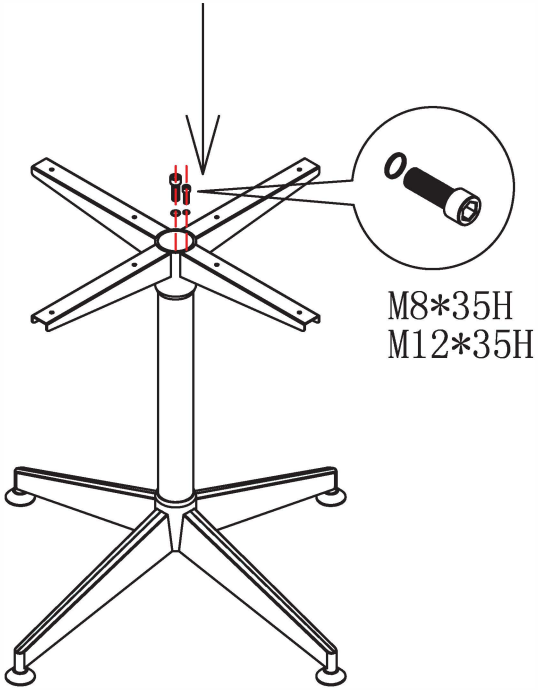
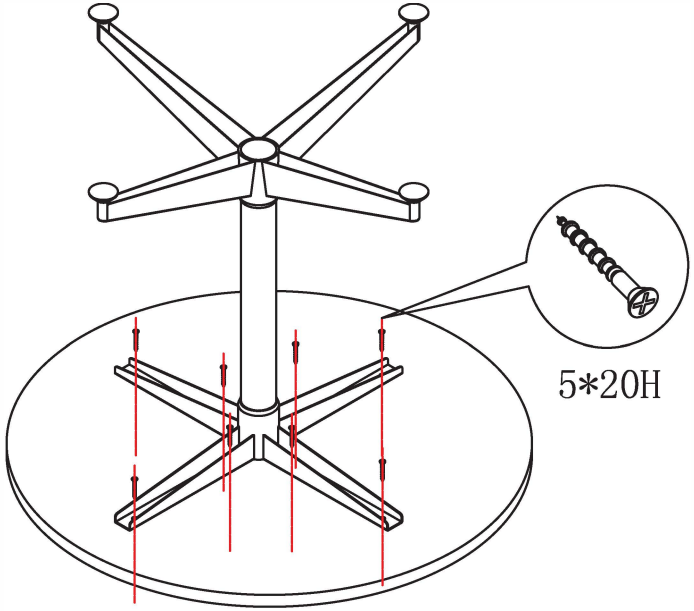
2