Assembly Instructions:

Product Code : TFT1575 / TFT1875
Product Name: Typhoon Flip Top

Time Required:

25 minutes

Tools Required:

Screwdriver, Electric Drill, Pencil, Measuring tape/Ruler
*Tools are not included.

Skill Required:

Easy ●●●●○ Hard

The Assembly Skill Rating is a 5-point system that shows the degree of effort needed in assembling a specific product.
With 1 being easy for the average person and 5 requiring an expert. For most products, two persons are recommended.

• As th s may be required.
• Nc ble or desk tops.
embling.
• If you are missing any harc e ensure you have the name of the item,

EFI FURNITURE
EFI Furniture
32 Lisa Place, Coolaroo VIC 3048
03 9302 3067
efifurniture.com.au
contact@efifurniture.com

• Please retain your receipt as proof of purchase to validate your warranty.
• Assemble on a clean, flat, smooth surface such as a rug or carpet to avoid parts from being scratched.
• Remove all wrapping materials, including staples and packing straps before you start to assemble
• Keep all hardware parts out of reach of children.

CAUTION

• Heavy product. Do not attempt to lift or move without help
• Do not tighten screws and bolts until completely assembled.
• Do not use this product unless all bolts and screws are firmly secured and tightened.

WARNING

• If parts are missing, broken, damaged or worn stop using the product until all repairs are made.
• Failure to follow these warnings could result in serious injury.

EFI FURNITURE

ASSEMBLY INSTRUCTIONS

MODEL: TFF15 & TFF18

TYPHOON FLIP TOP TABLE

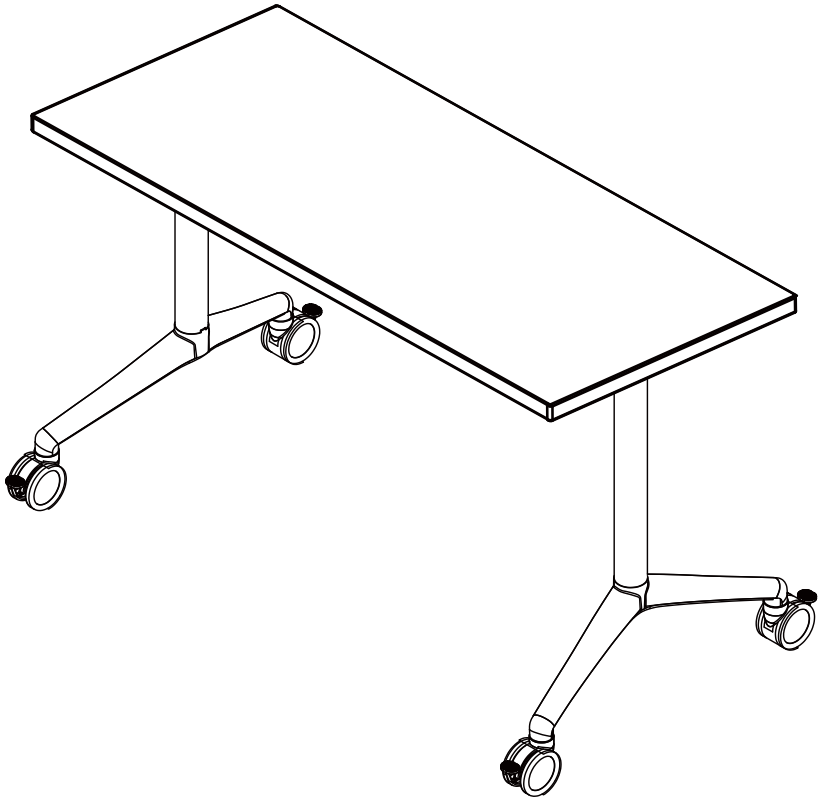

WEIGHT CAPACITY

PARTS:

①	②	③	④	⑤	⑥	⑦	⑧	⑨	⑩	⑪
4PCS M10*60H	2PCS M8*90H	12PCS M5*30H	8PCS M5*20H	4PCS	1PCS 8MM	1PCS 5MM	1PCS M14	2PCS	2PCS	2PCS
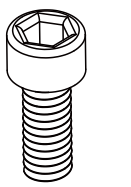	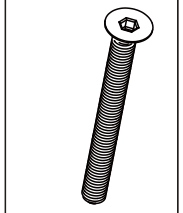	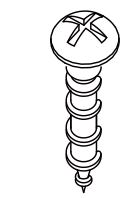	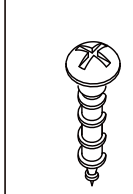	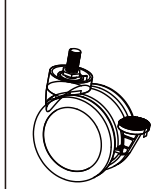	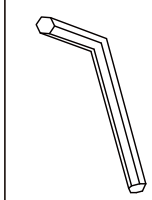	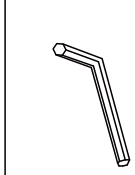	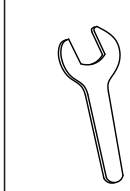	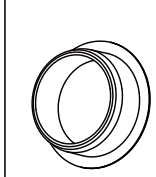	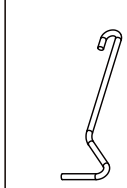	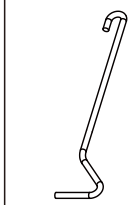

INSTALLATION :

First Step

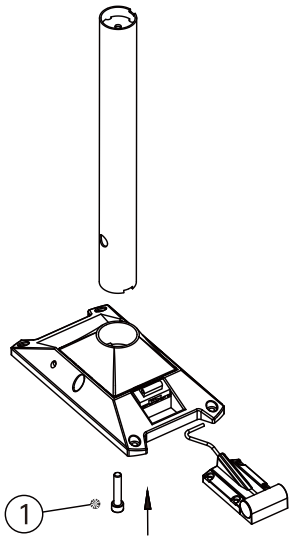

Second Step

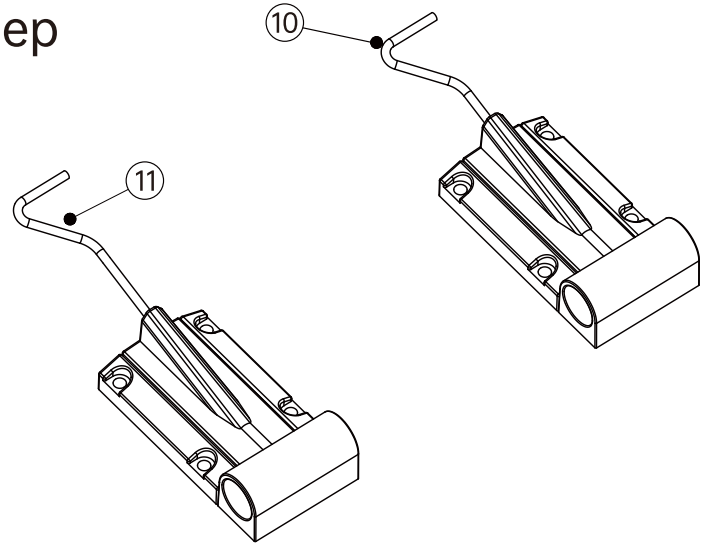

Remarks:
Long hook: to match the 800-900mm wide desktop;
Short hook: to match the 600-800mm wide desktop;

Third Step

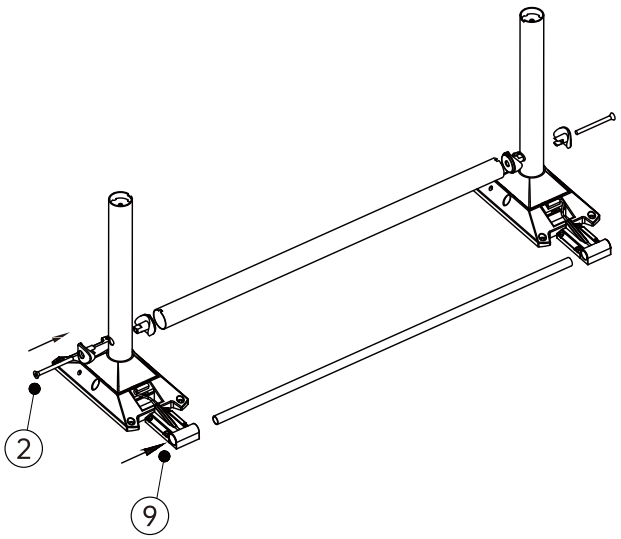

The Fourth Step

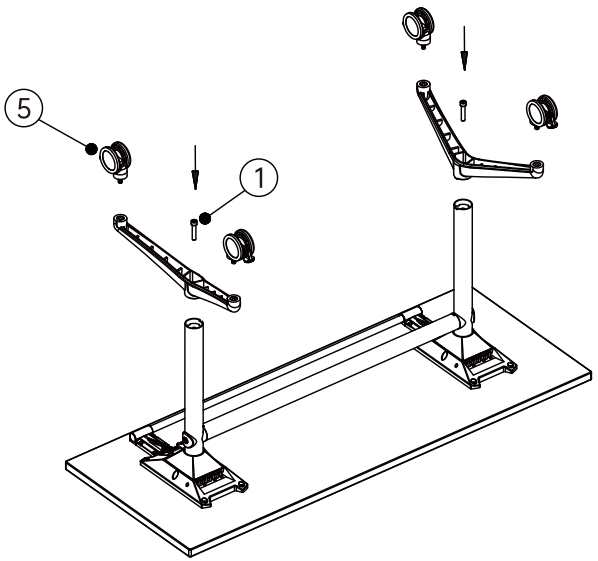

The Fifth Step

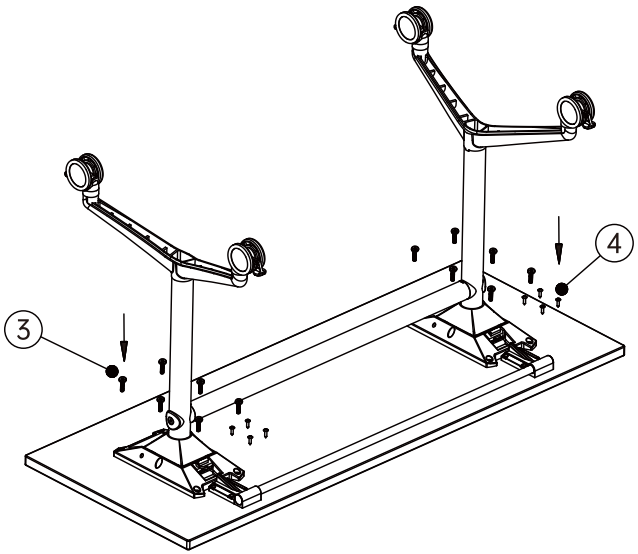
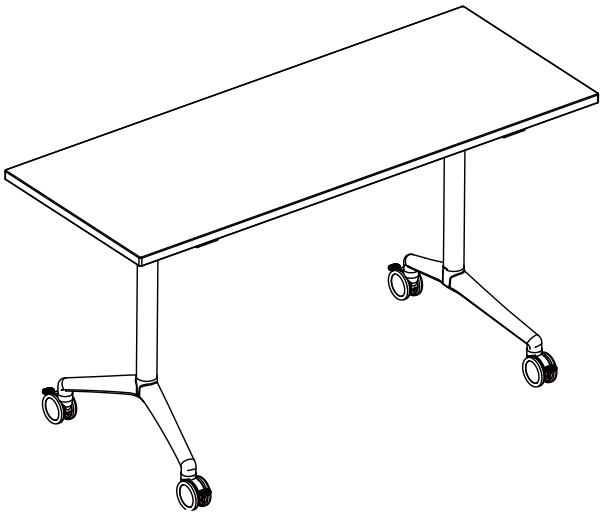
The Table Is Installed